Automatic Washers

Refer to Page 3 for Model Numbers

Parts

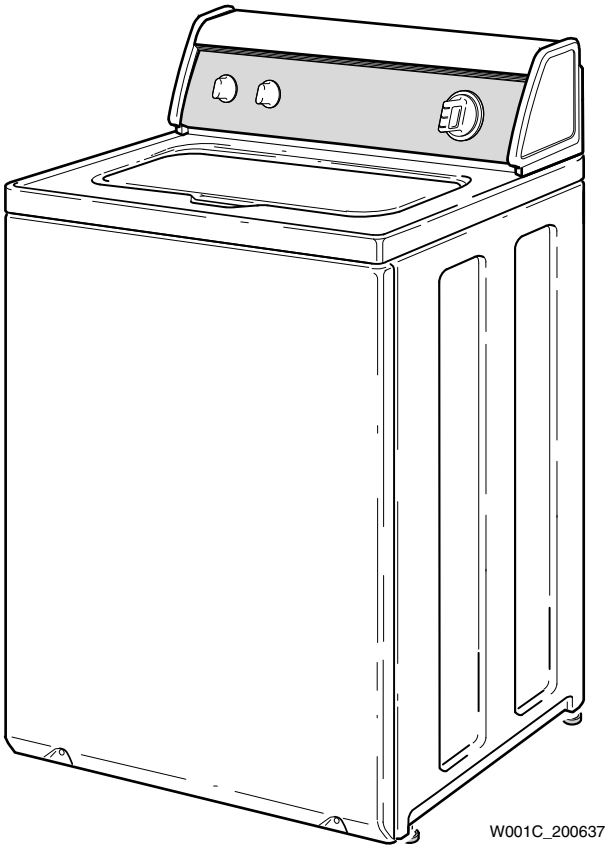

Alliance Laundry Systems

www.comlaundry.com

Part No. 200637R2
June 2012

Table of Contents

Title	Page
Parts Ordering Information	2
Nameplate Location	2
Model Identification	3
Graphic Panel, Control Hood and Controls (Drawing 1 of 9)	4
Graphic Panel, Control Hood and Controls (Drawing 2 of 9)	6
Graphic Panel, Control Hood and Controls (Drawing 3 of 9)	8
Graphic Panel, Control Hood and Controls (Drawing 4 of 9)	10
Graphic Panel, Control Hood and Controls (Drawing 5 of 9)	12
Graphic Panel, Control Hood and Controls (Drawing 6 of 9)	14
Graphic Panel, Control Hood and Controls (Drawing 7 of 9)	16
Graphic Panel, Control Hood and Controls (Drawing 8 of 9)	18
Graphic Panel, Control Hood and Controls (Drawing 9 of 9)	20
Cabinet Top, Loading Door and Control Hood Rear Panel (Drawing 1 of 2)	22
Cabinet Top, Loading Door and Control Hood Rear Panel (Drawing 2 of 2)	24
Lid Switch	26
Loading Door Switch and Bracket Assembly	28
Inlet Hose, Filler Hose, Back Flow Preventer and Mixing Valve Mounting Bracket (Drawing 1 of 2)	30
Inlet Hose, Filler Hose, Back Flow Preventer and Mixing Valve Mounting Bracket (Drawing 2 of 2)	32
Mixing Valve Assembly (Drawing 1 of 2)	34
Mixing Valve Assembly (Drawing 2 of 2)	36
Agitator, Drive Bell and Seal Kit	38
Lint Filter, Washtub and Hub	40
Outer Tub, Cover and Pressure Hose	42
Motor, Mounting Bracket, Belts and Idler Assembly	44
Bearing Housing, Brake, Pulley and Pivot Dome	46
Transmission Assembly and Balance Ring	48
Components for 33227P Transmission Assembly	50
Pump Assembly, Bracket, Hoses and Siphon Break Kit (Drawing 1 of 2)	52
Pump Assembly, Bracket, Hoses and Siphon Break Kit (Drawing 2 of 2)	54
Front Panel, Cabinet and Base	56
Power Cord and Wire Terminals	58
Special Tools (Drawing 1 of 2)	60
Special Tools (Drawing 2 of 2)	62
Wire Harnesses and Wires	64
Parts Index	65

© Copyright 2012, Alliance Laundry Systems LLC

All rights reserved. No part of the contents of this book may be reproduced or transmitted in any form or by any means without the expressed written consent of the publisher.

Parts Ordering Information

If literature or replacement parts are required, contact the source from whom the machine was purchased or contact Alliance Laundry Systems at (920) 748-3950 for the name and address of the nearest authorized parts distributor.

For technical assistance, call either of the numbers listed below:

(920) 748-3121 Ripon, Wisconsin

+32 56 41 20 54 Wevelgem, Belgium

Nameplate Location

When calling or writing about your product, be sure to mention model and serial numbers. Model and serial numbers are located on nameplate(s) as shown.

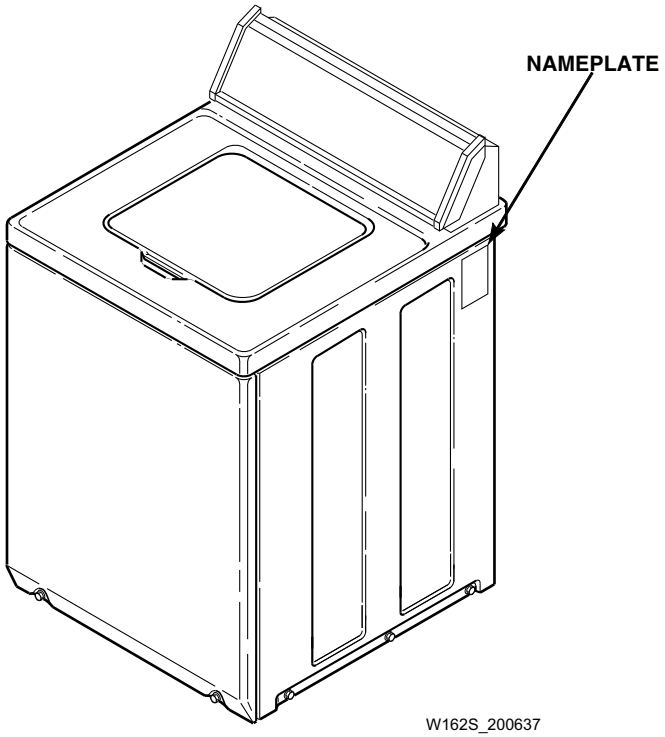

© Copyright, Alliance Laundry Systems LLC – DO NOT COPY or TRANSMIT

Model Identification

Information in this manual is applicable to these washer models:

AA3110	NA2110	NA3612	NA5531-2200
AA3111	NA2310	NA4320	NA5721
AA3210	NA2510	NA4321	NA6321
AA4110	NA3310	NA4520	NA6331
AA4111	NA3310-1000	NA4521	NA6332
AA4210	NA3310-3000	NA4521-2200	NA6520
AA4210-2210	NA3311	NA4522	NA6521
AA4211	NA3311-1168	NA4621	NA6522
AA4211-2210	NA3311-3050	NA5320	NA6530
AA4212	NA3311-3059	NA5321	NA6531
AA5121	NA3311-3062	NA5330	NA6532
AA5220	NA3311-3069	NA5331	NA6621
AA5221	NA3312	NA5331-1000	NA7321
AA5222	NA3320	NA5331-2000	NA7521
AA6121	NA3510	NA5331-3000	NA8331
AA6221	NA3510-2200	NA5331-3050	NA8531
AA7131	NA3510-3300	NA5331-3062	NA8631
AA7231	NA3511	NA5520	
AA8231	NA3511-3300	NA5521	
AA9131	NA3512	NA5530	
AA9231	NA3520	NA5531	

© Copyright, Alliance Laundry Systems LLC – DO NOT COPY or TRANSMIT

Graphic Panel, Control Hood and Controls (Drawing 1 of 9)

Models AA9131, AA9231, NA6331, NA6332, NA6530, NA6531, NA6532, NA8331, NA8531 and NA8631

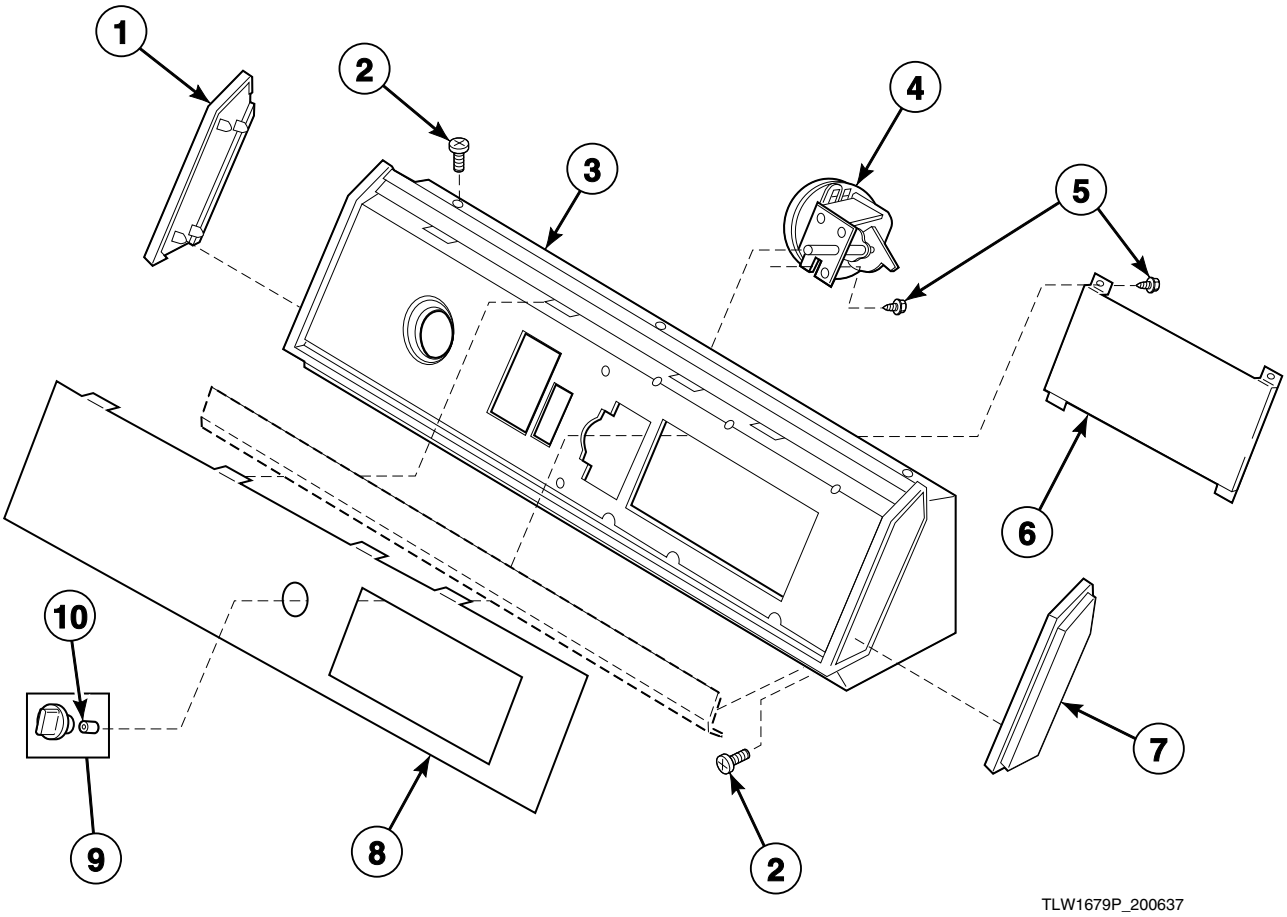

© Copyright, Alliance Laundry Systems LLC – DO NOT COPY or TRANSMIT

Graphic Panel, Control Hood and Controls (Drawing 1 of 9)

REF	PART NO.	DESCRIPTION	COMMENTS
1	32343	Control Hood Insert	Left; Models AA9131 and NA8631
	31249	End Cap	Left; All other models
2	31752	Screw	
3	31224	Control Hood	
4	31266	Rotary Pressure Switch	Models AA9131 and AA9231
	31116	Slide Pressure Switch	Models NA6530, NA6531, NA6532, NA8531 and NA8631
	31675	Pressure Switch	Models NA6331, NA6332 and NA8331
5	31260	Screw	
6	31304	Electronic Control Assembly	Models AA9131, AA9231, NA8531 and NA8631
	31307	Electronic Control Assembly	Model NA8331
	31305	Electronic Control Assembly	Models NA6530, NA6531 and NA6532
	31308P	Electronic Control Assembly	Models NA6331 and NA6332
7	32342	Control Hood Insert	Right; Models AA9131 and NA8631
	31248	End Cap	Right; All other models
8	32734	Graphic Panel	Model AA9231
	32357	Graphic Panel	Model AA9131
	32665	Graphic Panel	Model NA8631
	31181	Graphic Panel	Model NA8531
	31193	Graphic Panel	Model NA8331
	31183	Graphic Panel	Models NA6530 and NA6532
	31182	Graphic Panel	Model NA6531
	31737	Graphic Panel	Model NA6332
	31194	Graphic Panel	Model NA6331
9	31286	Knob Assembly	Models AA9131 and AA9231
10	10519	Retainer	

© Copyright, Alliance Laundry Systems LLC – DO NOT COPY or TRANSMIT

Graphic Panel, Control Hood and Controls (Drawing 2 of 9)

Models NA7321 and NA7521

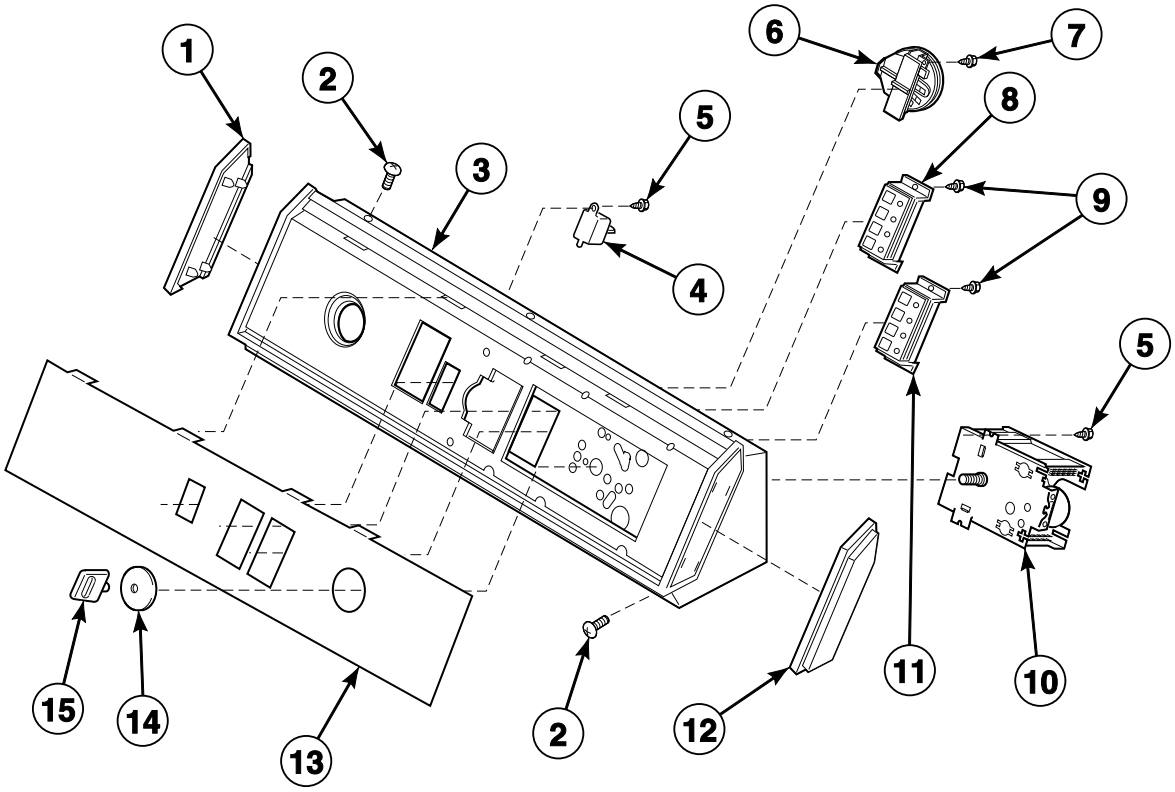

TLW1680P_200637

© Copyright, Alliance Laundry Systems LLC – DO NOT COPY or TRANSMIT

Graphic Panel, Control Hood and Controls (Drawing 2 of 9)

REF	PART NO.	DESCRIPTION	COMMENTS
1	31249	End Cap	Left
2	31752	Screw	
3	31734	Control Hood Assembly	
4	59446	Signal	
5	23962	Screw	
6	31116	Slide Pressure Switch	Model NA7521
	31675	Pressure Switch	Model NA7321
7	31260	Screw	
8	31330	Switch and Cover Assembly	Model NA7521
	31332	Switch and Cover Assembly	Model NA7321
9	502535	Screw	
10	31240	Timer	
11	31331	Switch and Cover Assembly	Model NA7521
	31333	Switch and Cover Assembly	Model NA7321
12	31248	End Cap	Right
13	31186	Graphic Panel	Model NA7521
	31197	Graphic Panel	Model NA7321
14	31503	Timer Skirt Assembly	Model NA7521
	31279	Timer Skirt Assembly	Model NA7321
15	31281	Timer Knob Assembly	

© Copyright, Alliance Laundry Systems LLC – DO NOT COPY or TRANSMIT

Graphic Panel, Control Hood and Controls (Drawing 3 of 9)

Models AA7131, AA7231, AA8231, NA5330, NA5331, NA5331-1000, NA5331-2000, NA5331-3000, NA5331-3050, NA5331-3062, NA5530, NA5531 and NA5531-2200

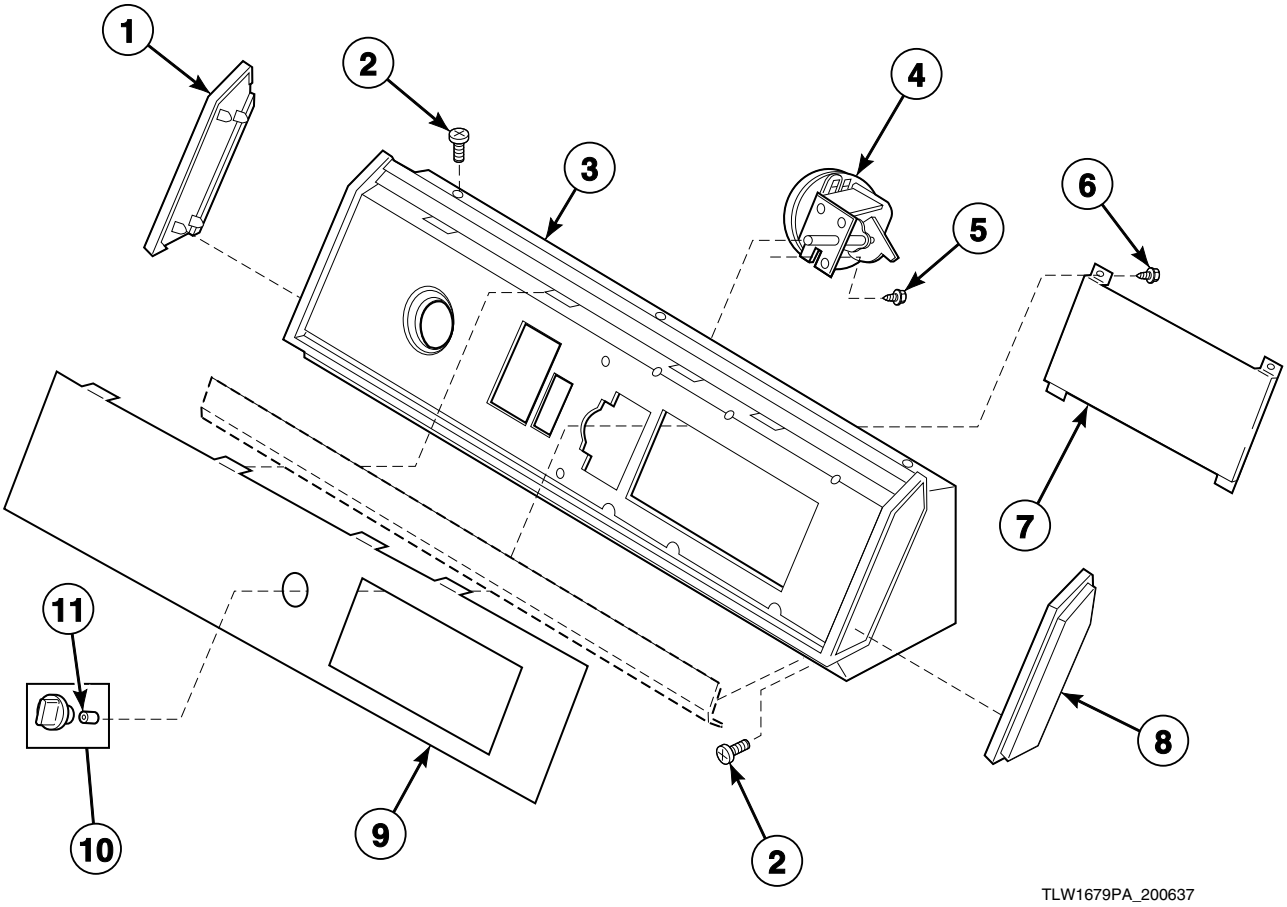

© Copyright, Alliance Laundry Systems LLC – DO NOT COPY or TRANSMIT

Graphic Panel, Control Hood and Controls (Drawing 3 of 9)

REF	PART NO.	DESCRIPTION	COMMENTS
1	32343	Control Hood Insert	Left; Model AA7131
	31249	End Cap	Left; All other models
2	31752	Screw	
3	31809	Hood and Mounting Bracket Assembly	
4	31266	Rotary Pressure Switch	
5	23962	Screw	
6	31260	Screw	
7	31306	Electronic Control Assembly	Models AA7131, AA7231, NA5530, NA5531 and NA5531-2200
	31305	Electronic Control Assembly	Model AA8231
	31309P	Electronic Control Assembly	Models NA5330, NA5331, NA5331-1000, NA5331-2000, NA5331-3000, NA5331-3050 and NA5331-3062
8	32342	Control Hood Insert	Right; Model AA7131
	31248	End Cap	Right; All other models
9	32734	Graphic Panel	Models AA7231 and AA8231
	32357	Graphic Panel	Model AA7131
	31184	Graphic Panel	Model NA5531
	31185	Graphic Panel	Model NA5530
	31195	Graphic Panel	Model NA5331
	31196	Graphic Panel	Model NA5330
10	31286	Knob Assembly	Models AA7131, NA5530, NA5531 and NA5531-2200
	31287	Knob Assembly	Models NA5330, NA5331, NA5331-1000, NA5331-2000, NA5331-3000, NA5331-3050 and NA5331-3062
11	10519	Retainer	

© Copyright, Alliance Laundry Systems LLC – DO NOT COPY or TRANSMIT

Graphic Panel, Control Hood and Controls (Drawing 4 of 9)

Models AA6121, AA6221, NA6321, NA6520, NA6521, NA6522 and NA6621

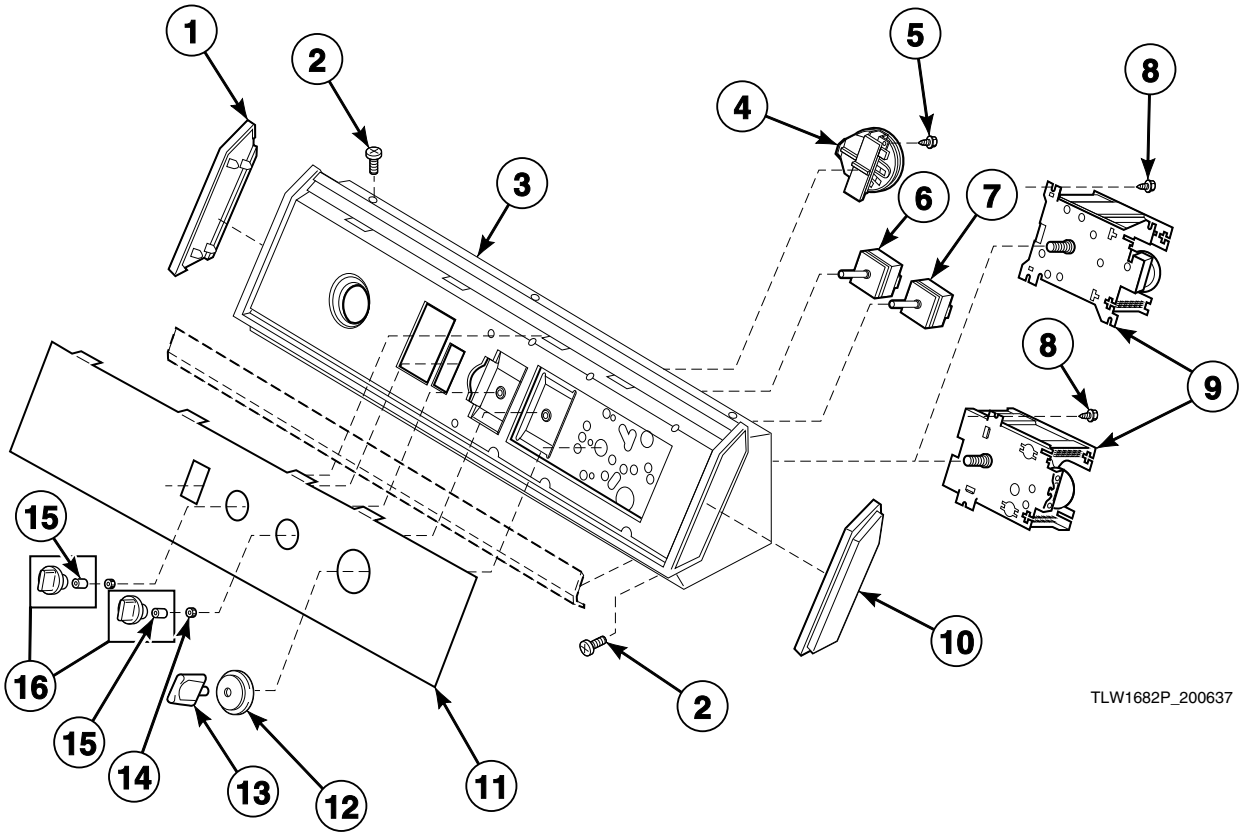

© Copyright, Alliance Laundry Systems LLC – DO NOT COPY or TRANSMIT

Graphic Panel, Control Hood and Controls (Drawing 4 of 9)

REF	PART NO.	DESCRIPTION	COMMENTS
1	32343	Control Hood Insert	Left; Models AA6121 and NA6621
	31249	End Cap	Left; All other models
2	31752	Screw	
3	32404	Control Hood Assembly	
4	31675	Pressure Switch	Model NA6321
	31116	Slide Pressure Switch	All other models
5	31260	Screw	
6	24392	Temperature Switch	
7	27500	Speed Selector Switch	
8	23962	Screw	
9	32228P	Timer	
10	32342	Control Hood Insert	Right; Models AA6121 and NA6621
	31248	End Cap	Right; All other models
11	32730	Graphic Panel	Model AA6221
	32666	Graphic Panel	Model NA6621
	32237	Graphic Panel	Models NA6520 and NA6522
	32226	Graphic Panel	Model NA6521
	32241	Graphic Panel	Model NA6321
	32402	Graphic Panel	Model AA6121
12	31503	Timer Skirt Assembly	Model NA6321
	31279	Timer Skirt Assembly	All other models
13	31281	Timer Knob Assembly	
14	57584	Nut	
15	10519	Retainer	
16	31287	Knob Assembly	Model NA6321
	31286	Knob Assembly	All other models

© Copyright, Alliance Laundry Systems LLC – DO NOT COPY or TRANSMIT

Graphic Panel, Control Hood and Controls (Drawing 5 of 9)

Models AA3110, AA3111, AA3210, AA4110, AA4111, AA4210, AA4210-2210, AA4211, AA4211-2210, AA4212, AA5121, AA5221, NA3612, NA4621 and NA5721

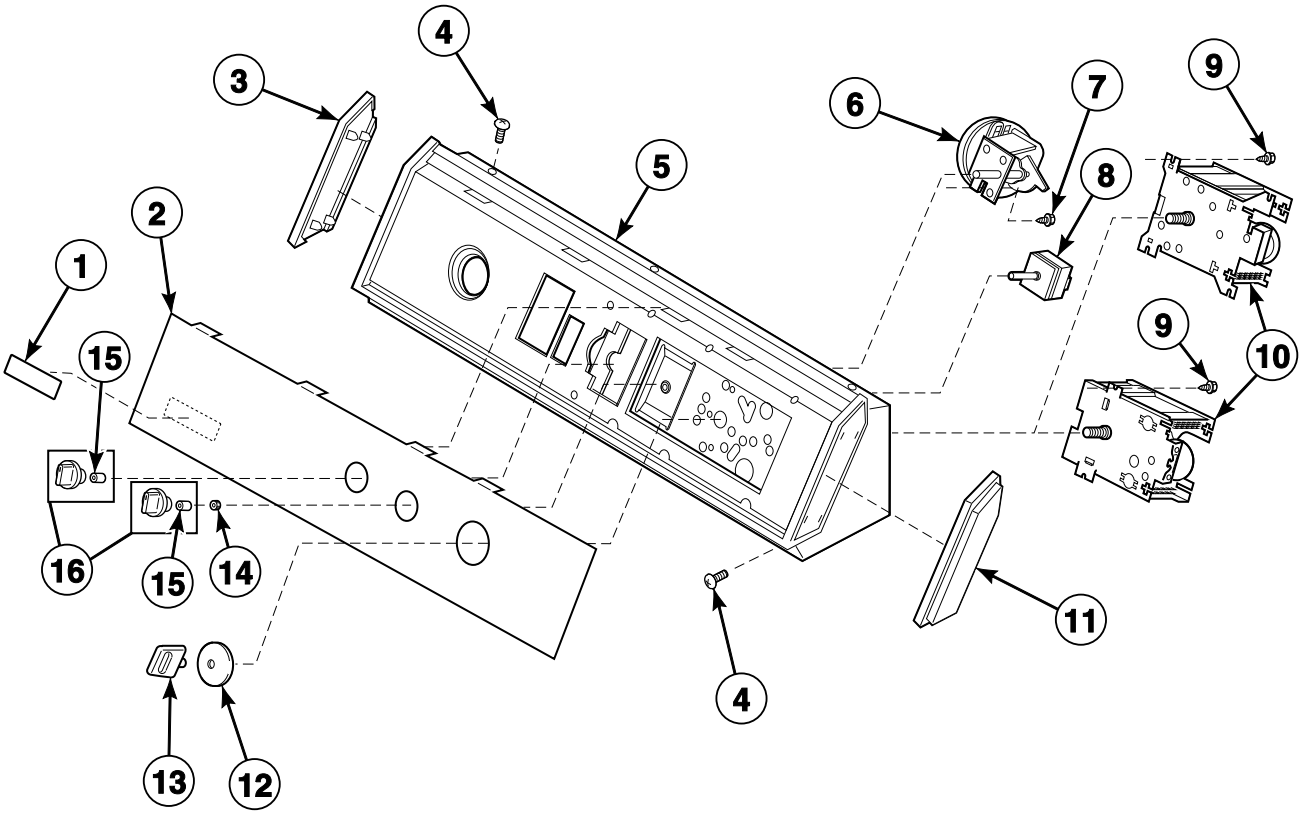

TLW1683P_200637

© Copyright, Alliance Laundry Systems LLC – DO NOT COPY or TRANSMIT

Graphic Panel, Control Hood and Controls (Drawing 5 of 9)

REF	PART NO.	DESCRIPTION	COMMENTS
1	32630	Nameplate	Model NA5721
2	32634	Graphic Panel	Model NA5721
	32726	Graphic Panel	Model AA5221
	32353	Graphic Panel	Model AA5121
	32667	Graphic Panel	Model NA4621
	32722	Graphic Panel	Model AA4211
	32718	Graphic Panel	Model AA4210
	32349	Graphic Panel	Model AA4111
	32398	Graphic Panel	Model AA4110
	33146	Graphic Panel	Model NA3612
	32714	Graphic Panel	Model AA3210
	32341	Graphic Panel	Model AA3110
3	31249	End Cap	Left; Models AA3210, AA4210, AA4210-2210, AA4211, AA4211-2210, AA5221, NA3612 and NA5721
	32343	Control Hood Insert	Left; All other models
4	31752	Screw	
5	31735	Control Hood Assembly	
6	31266	Rotary Pressure Switch	
7	31260	Screw	
8	28118	Water Temperature Switch	Models AA5121, AA5221, NA4621 and NA5721
	21300	Temperature Switch	All other models
9	23962	Screw	
10	32039P	Timer	Model NA5721
	31239P	Timer	Models AA4110, AA4111, AA4210, AA4212, AA5121, AA5221, NA3612 and NA4621
	31238P	Timer	Models AA3110 and AA3111
11	31248	End Cap	Right; Models AA3210, AA4210, AA4210-2210, AA4211, AA4211-2210, AA5221, NA3612 and NA5721
	32342	Control Hood Insert	Right; All other models
12	31279	Timer Skirt Assembly	
13	31281	Timer Knob Assembly	
14	57584	Nut	
15	10519	Retainer	
16	31286	Knob Assembly	

© Copyright, Alliance Laundry Systems LLC – DO NOT COPY or TRANSMIT

Graphic Panel, Control Hood and Controls (Drawing 6 of 9)

Models NA5320, NA5321, NA5520 and NA5521

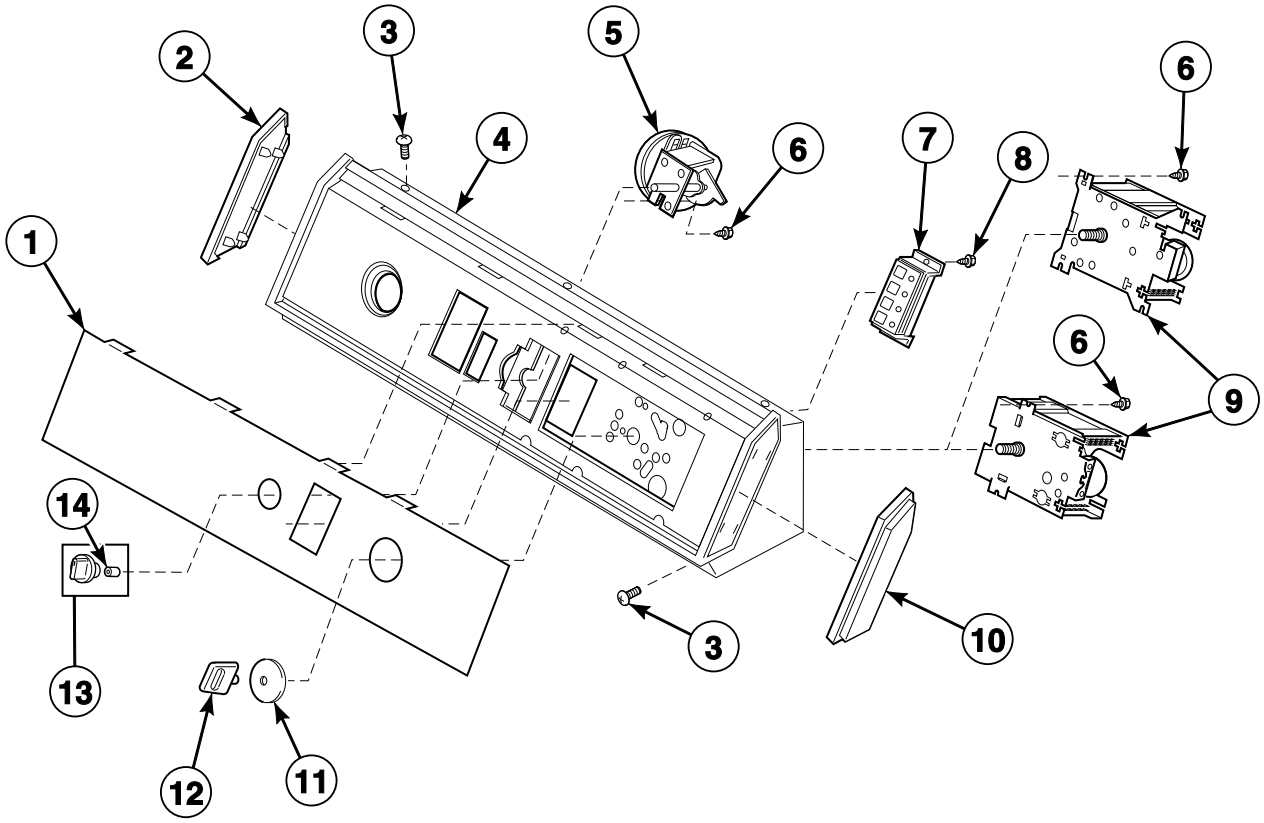

© Copyright, Alliance Laundry Systems LLC – DO NOT COPY or TRANSMIT

Graphic Panel, Control Hood and Controls (Drawing 6 of 9)

REF	PART NO.	DESCRIPTION	COMMENTS
1	31187	Graphic Panel	Model NA5521
	31188	Graphic Panel	Model NA5520
	31198	Graphic Panel	Model NA5321
	31199	Graphic Panel	Model NA5320
2	31249	End Cap	Left
3	31752	Screw	
4	31810	Hood and Mounting Bracket Assembly	
5	31266	Rotary Pressure Switch	
6	23962	Screw	
7	31330	Switch and Cover Assembly	Models NA5520 and NA5521
	31332	Switch and Cover Assembly	Models NA5320 and NA5321
8	502535	Screw	
9	31239P	Timer	
10	31248	End Cap	Right
11	31279	Timer Skirt Assembly	Models NA5520 and NA5521
	31503	Timer Skirt Assembly	Models NA5320 and NA5321
12	31281	Timer Knob Assembly	
13	31286	Knob Assembly	Models NA5520 and NA5521
	31287	Knob Assembly	Models NA5320 and NA5321
14	10519	Retainer	

© Copyright, Alliance Laundry Systems LLC – DO NOT COPY or TRANSMIT

Graphic Panel, Control Hood and Controls (Drawing 7 of 9)

Models AA5220, AA5222, NA4320, NA4321, NA4520, NA4521, NA4521-2200 and NA4522

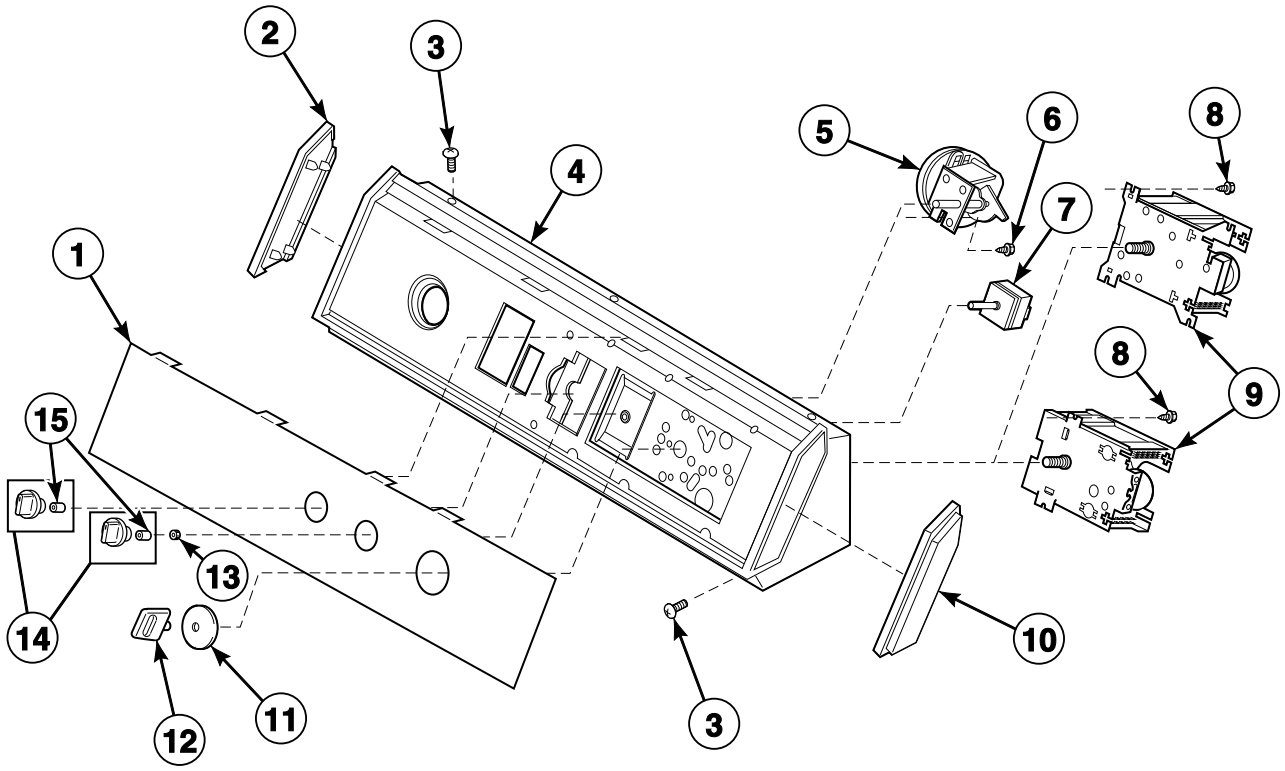

© Copyright, Alliance Laundry Systems LLC – DO NOT COPY or TRANSMIT

Graphic Panel, Control Hood and Controls (Drawing 7 of 9)

REF	PART NO.	DESCRIPTION	COMMENTS
1	31189	Graphic Panel	Models through Serial No. 43R19503; Model NA4521
	31190	Graphic Panel	Models through Serial No. 43R19503; Model NA4520
	31200	Graphic Panel	Models through Serial No. 43R19503; Model NA4321
	31201	Graphic Panel	Models through Serial No. 43R19503; Model NA4320
	32204	Graphic Panel	Models starting Serial No. 43R19504; Models NA4520 and NA4522
	32202	Graphic Panel	Models starting Serial No. 43R19504; Model NA4521
	32205	Graphic Panel	Models starting Serial No. 43R19504; Model NA4321
	32206	Graphic Panel	Models starting Serial No. 43R19504; Model NA4320
	33013	Graphic Panel	Model AA5220
2	31249	End Cap	Left
3	31752	Screw	
4	31735	Control Hood Assembly	
5	31266	Rotary Pressure Switch	
6	31260	Screw	
7	21300	Temperature Switch	Models through Serial No. 43R19503
	28118	Water Temperature Switch	Models starting Serial No. 43R19504
8	23962	Screw	
9	31239P	Timer	
10	31248	End Cap	Right
11	31279	Timer Skirt Assembly	Models NA4520, NA4521, NA4521-2200 and NA4522
	31503	Timer Skirt Assembly	Models NA4320 and NA4321
12	31281	Timer Knob Assembly	
13	57584	Nut	
14	31286	Knob Assembly	Models NA4520, NA4521, NA4521-2200 and NA4522
	31287	Knob Assembly	Models NA4320 and NA4321
15	10519	Retainer	

© Copyright, Alliance Laundry Systems LLC – DO NOT COPY or TRANSMIT

Graphic Panel, Control Hood and Controls (Drawing 8 of 9)

Models NA2310, NA2510, NA3310, NA3310-1000, NA3310-3000, NA3311, NA3311-1168, NA3311-3050, NA3311-3059, NA3311-3062, NA3311-3069, NA3312, NA3320, NA3510, NA3510-2200, NA3510-3300, NA3511, NA3511-3300, NA3512 and NA3520

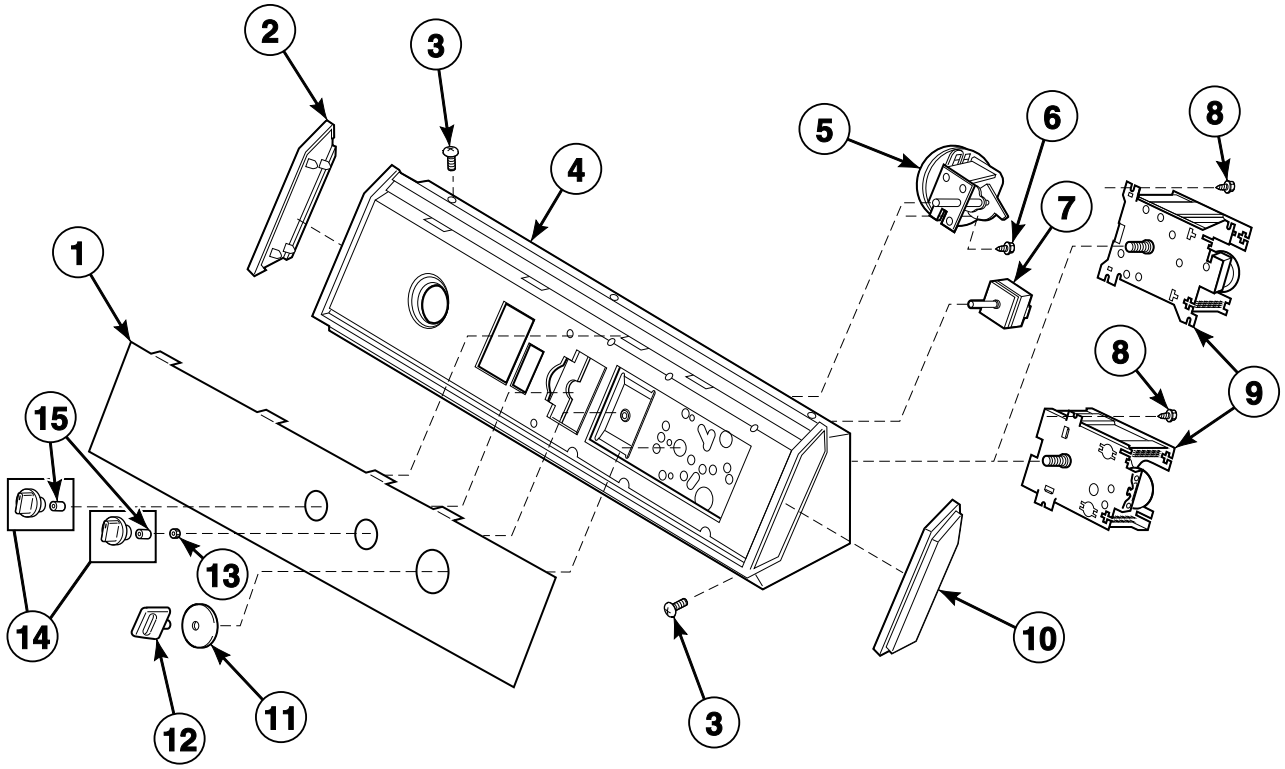

TLW1685P_200637

© Copyright, Alliance Laundry Systems LLC – DO NOT COPY or TRANSMIT

Graphic Panel, Control Hood and Controls (Drawing 8 of 9)

REF	PART NO.	DESCRIPTION	COMMENTS
1	31190	Graphic Panel	Model NA3520
	31191	Graphic Panel	Model NA3511
	31192	Graphic Panel	Models NA3510 and NA3512
	31201	Graphic Panel	Model NA3320
	31202	Graphic Panel	Model NA3311
	31203	Graphic Panel	Models NA3310 and NA3312
	32193	Graphic Panel	Model NA2510
	32199	Graphic Panel	Model NA2310
2	31249	End Cap	Left
3	31752	Screw	
4	31735	Control Hood Assembly	
5	31266	Rotary Pressure Switch	
6	31260	Screw	
7	21300	Temperature Switch	
8	23962	Screw	
9	31243P	Timer	Model NA3310-1000
	31242	Timer	Models NA3510-3300 and NA3511-3300
	31241P	Timer	Models NA3310-3000, NA3311-3050, NA3311-3059, NA3311-3062 and NA3311-3069
	31238P	Timer	Models NA2310 and NA2510
	31239P	Timer	All other models
10	31248	End Cap	Right
11	31279	Timer Skirt Assembly	Models NA2510, NA3510, NA3510-2200, NA3510-3300, NA3511, NA3511-3300, NA3512 and NA3520
	31503	Timer Skirt Assembly	Models NA2310, NA3310, NA3310-1000, NA3310-3000, NA3311, NA3311-1168, NA3311-3050, NA3311-3059, NA3311-3062, NA3311-3069, NA3312 and NA3320
12	31281	Timer Knob Assembly	
13	57584	Nut	
14	31286	Knob Assembly	Models NA2510, NA3510, NA3510-2200, NA3510-3300, NA3511, NA3511-3300, NA3512 and NA3520
	31287	Knob Assembly	Models NA2310, NA3310, NA3310-1000, NA3310-3000, NA3311, NA3311-1168, NA3311-3050, NA3311-3059, NA3311-3062, NA3311-3069, NA3312 and NA3320
15	10519	Retainer	

© Copyright, Alliance Laundry Systems LLC – DO NOT COPY or TRANSMIT

Graphic Panel, Control Hood and Controls (Drawing 9 of 9)

Model NA2110

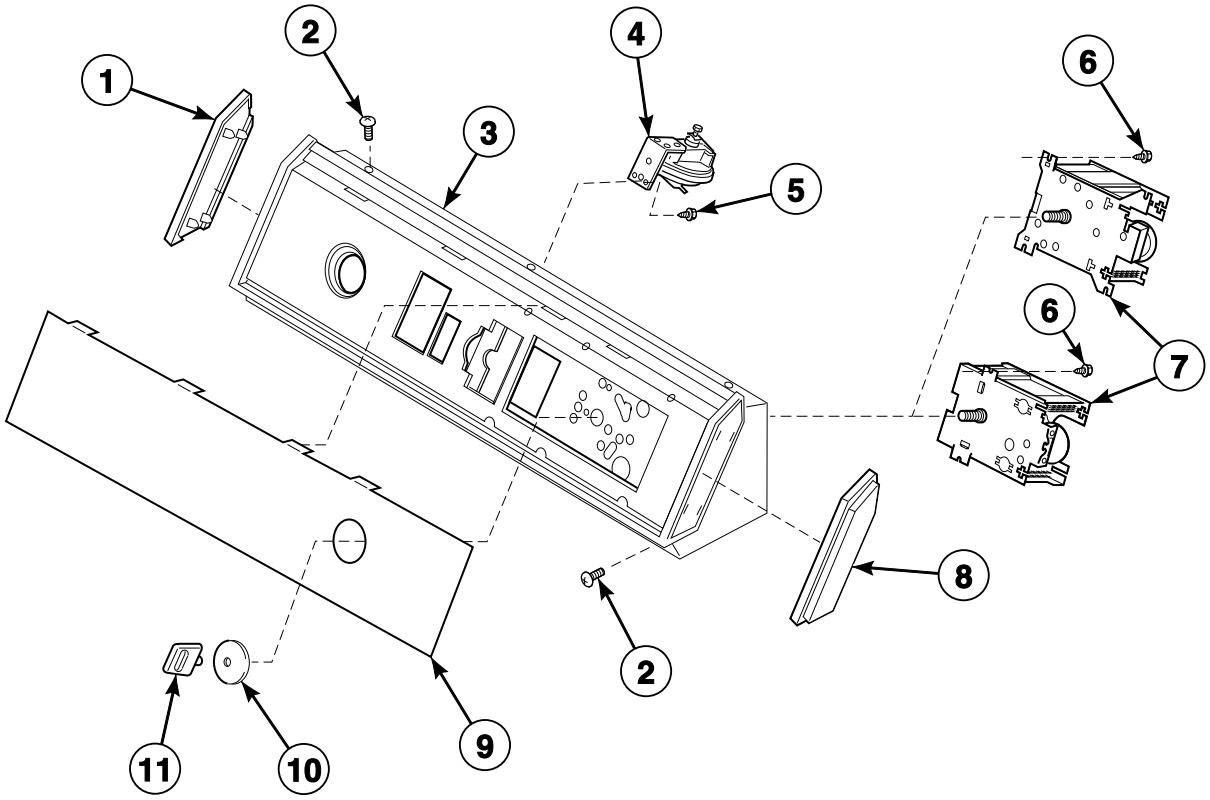

TLW1687P_200637

© Copyright, Alliance Laundry Systems LLC – DO NOT COPY or TRANSMIT

Graphic Panel, Control Hood and Controls (Drawing 9 of 9)

REF	PART NO.	DESCRIPTION	COMMENTS
1	34460	End Cap	Left
2	31752	Screw	
3	31811	Hood and Mounting Bracket Assembly	
4	28615P	Pressure Switch	
5	31260	Screw	
6	23962	Screw	
7	31238P	Timer	
8	34459	End Cap	Right
9	31204	Graphic Panel	
10	31267	Timer Skirt Assembly	
11	31281	Timer Knob Assembly	

© Copyright, Alliance Laundry Systems LLC – DO NOT COPY or TRANSMIT

Cabinet Top, Loading Door and Control Hood Rear Panel (Drawing 1 of 2)

Model NA2110 Starting Serial No. R1624440YK

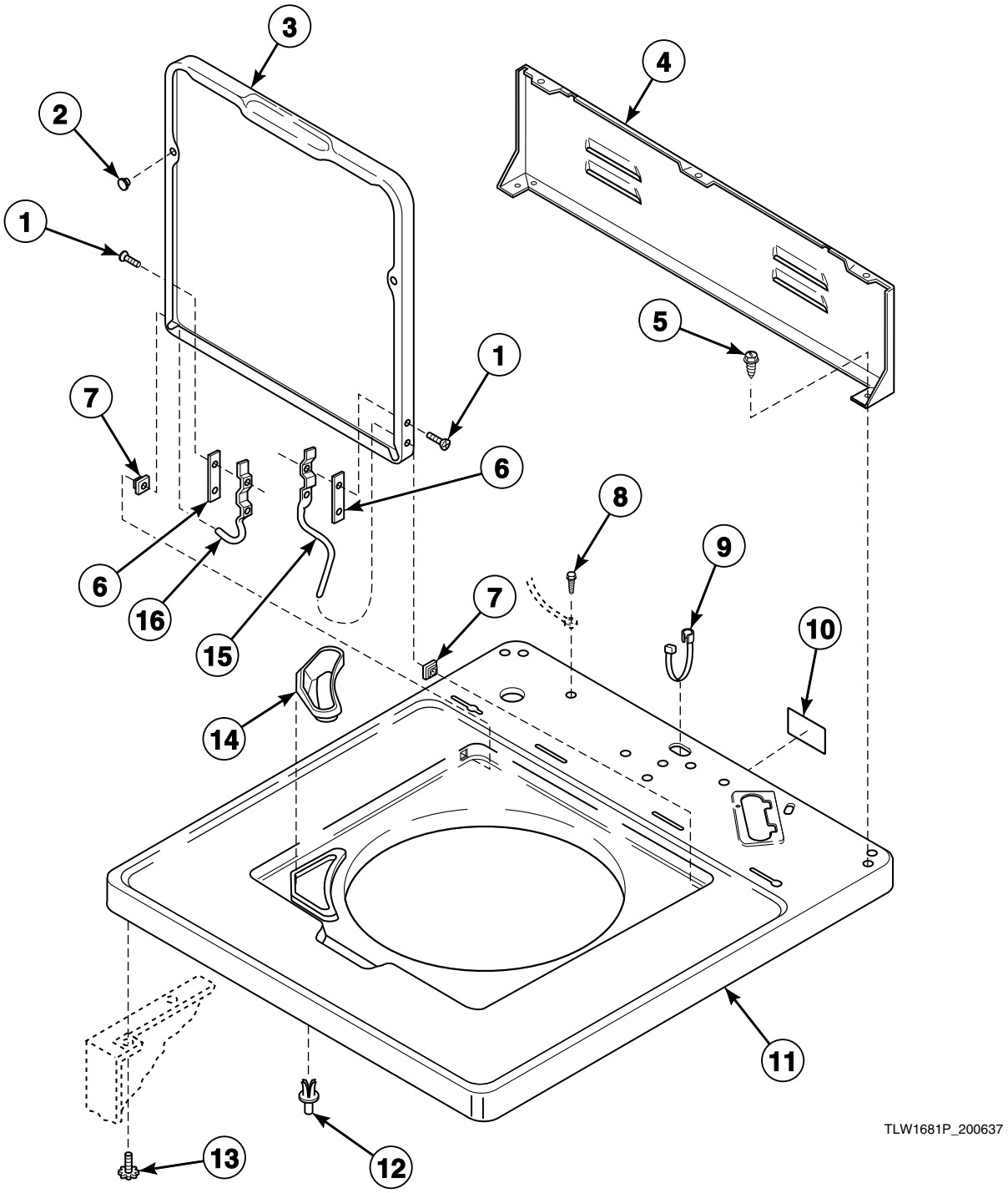

© Copyright, Alliance Laundry Systems LLC – DO NOT COPY or TRANSMIT

Cabinet Top, Loading Door and Control Hood Rear Panel (Drawing 1 of 2)

REF	PART NO.	DESCRIPTION	COMMENTS
1	34337	Screw	
2	21685	Bumper	
3	33541WP	Lid	White
4	37782	Hood Back Panel	
5	23962	Screw	
6	34338	Hinge Gasket	
7	33446	Bushing	
8	52909	Screw	
9	38384	Strain Relief	
10	505281	Disconnect Power Warning Label	
11	34902WP	Top Assembly	White
12	56534	Support Barrel	
13	33562	Screw	
14	34776	Bleach Dispenser	
15	36437	Lid Hinge	Right
16	36438	Lid Hinge	Left

© Copyright, Alliance Laundry Systems LLC – DO NOT COPY or TRANSMIT

Cabinet Top, Loading Door and Control Hood Rear Panel (Drawing 2 of 2)

All Models Except NA2110 Starting Serial No. R1624440YK

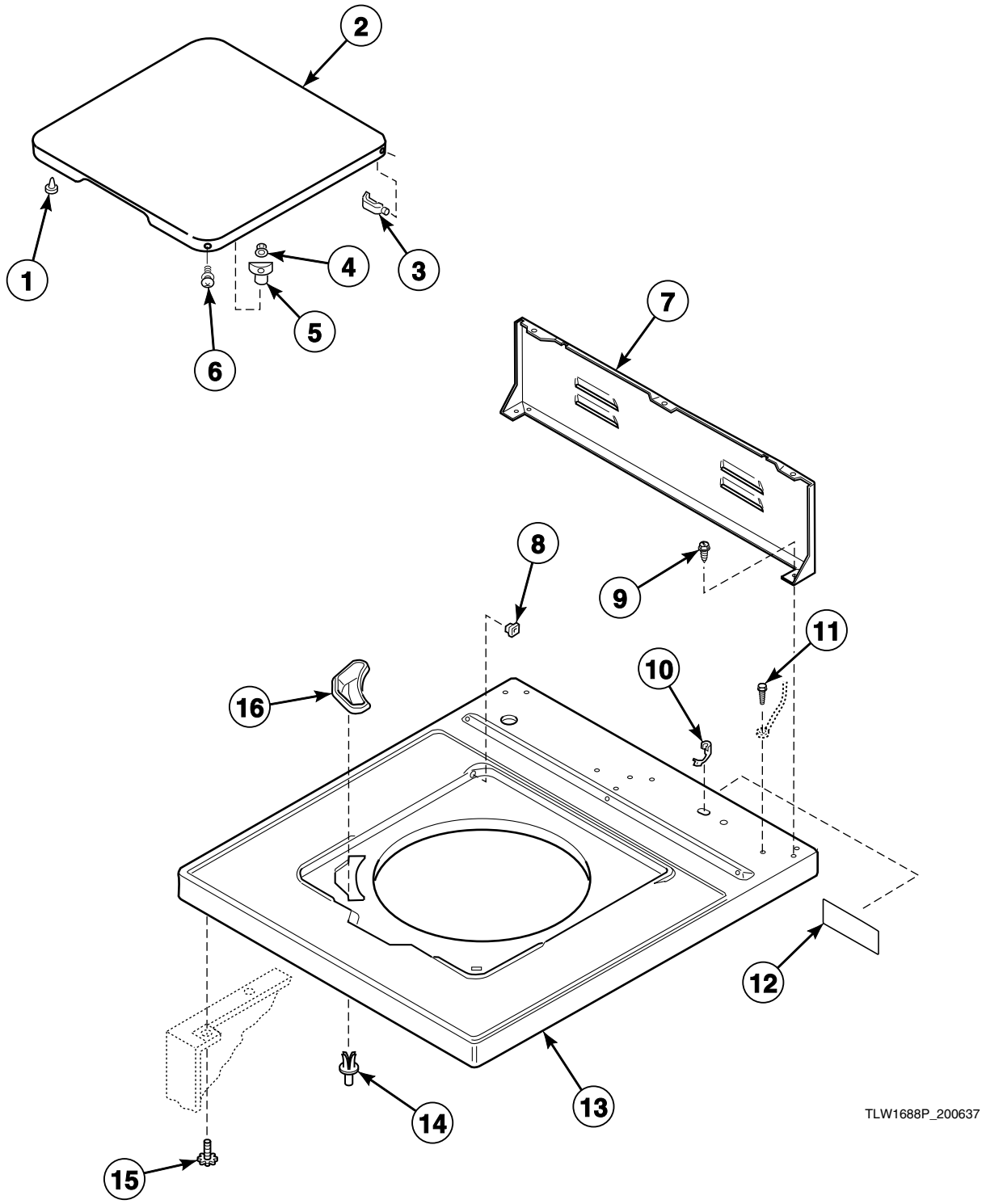

© Copyright, Alliance Laundry Systems LLC – DO NOT COPY or TRANSMIT

Cabinet Top, Loading Door and Control Hood Rear Panel (Drawing 2 of 2)

REF	PART NO.	DESCRIPTION	COMMENTS
1	32507	Bumper	
2	31317W	Lid	Model NA3311-3069
	31314WP	Lid and Carton Assembly	White; English; Models AA7131, AA9131, NA5330, NA5331, NA5331-1000, NA5331-2000, NA5331-3000, NA5331-3050, NA5331-3062, NA5530, NA5531, NA5531-2200, NA6331, NA6332, NA6530, NA6531, NA6532, NA8331, NA8531 and NA8631
	31314LP	Lid and Carton Assembly	Almond; English; Models AA7131, AA9131, NA5330, NA5331, NA5331-1000, NA5331-2000, NA5331-3000, NA5331-3050, NA5331-3062, NA5530, NA5531, NA5531-2200, NA6331, NA6332, NA6530, NA6531, NA6532, NA8331, NA8531 and NA8631
	31315WP	Lid and Carton Assembly	White; English; All other models
	31315LP	Lid and Carton Assembly	Almond; English; All other models
	33517W	Lid	French; All other models
3	27626	Hinge	
4	21752	Nut	Nylon
5	27149	Lid Switch Catch	
6	27203	Screw and Washer Assembly	
7	37782	Hood Back Panel	
8	27625	Bushing	
9	23962	Screw	
10	38384	Strain Relief	
11	52909	Screw	
12	505281	Disconnect Power Warning Label	
13	32810W	Lid Lock Top Assembly	Model NA3311-3069
	32808WP	Top and Carton Assembly	White; All other models
	32808LP	Top and Carton Assembly	Almond; All other models
14	56534	Support Barrel	
15	33562	Screw	
16	34776	Bleach Dispenser	Replaces 27121; All models except AA3110, AA3111, NA2310 and NA2510

© Copyright, Alliance Laundry Systems LLC – DO NOT COPY or TRANSMIT

Lid Switch

Model NA2110 Starting Serial No. R1624440YK

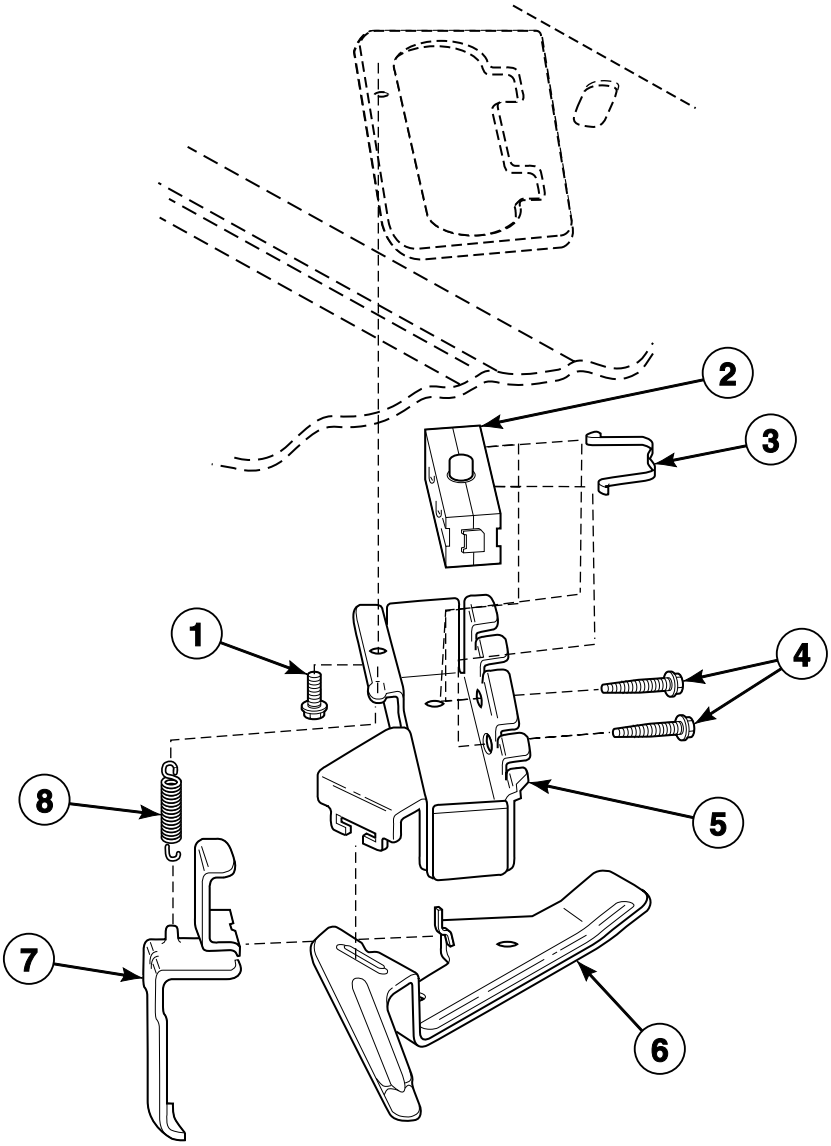

TLW1704P_200637

© Copyright, Alliance Laundry Systems LLC – DO NOT COPY or TRANSMIT

Lid Switch

REF	PART NO.	DESCRIPTION	COMMENTS
1	23962	Screw	
2	33445	Switch	
3	33433	Switch Holder Clip	Use with Switch Holder 33440
4	36510	Screw	Use with Switch Holder Kit 36497P
5	36497P	Switch Holder Kit	Replaces Switch Holder 33440
6	33441	Actuator Arm	
7	33442	Unbalanced Load Lever	
8	33443	Spring	

© Copyright, Alliance Laundry Systems LLC – DO NOT COPY or TRANSMIT

Loading Door Switch and Bracket Assembly

All Models Except NA2110 Starting Serial No. R1624440YK

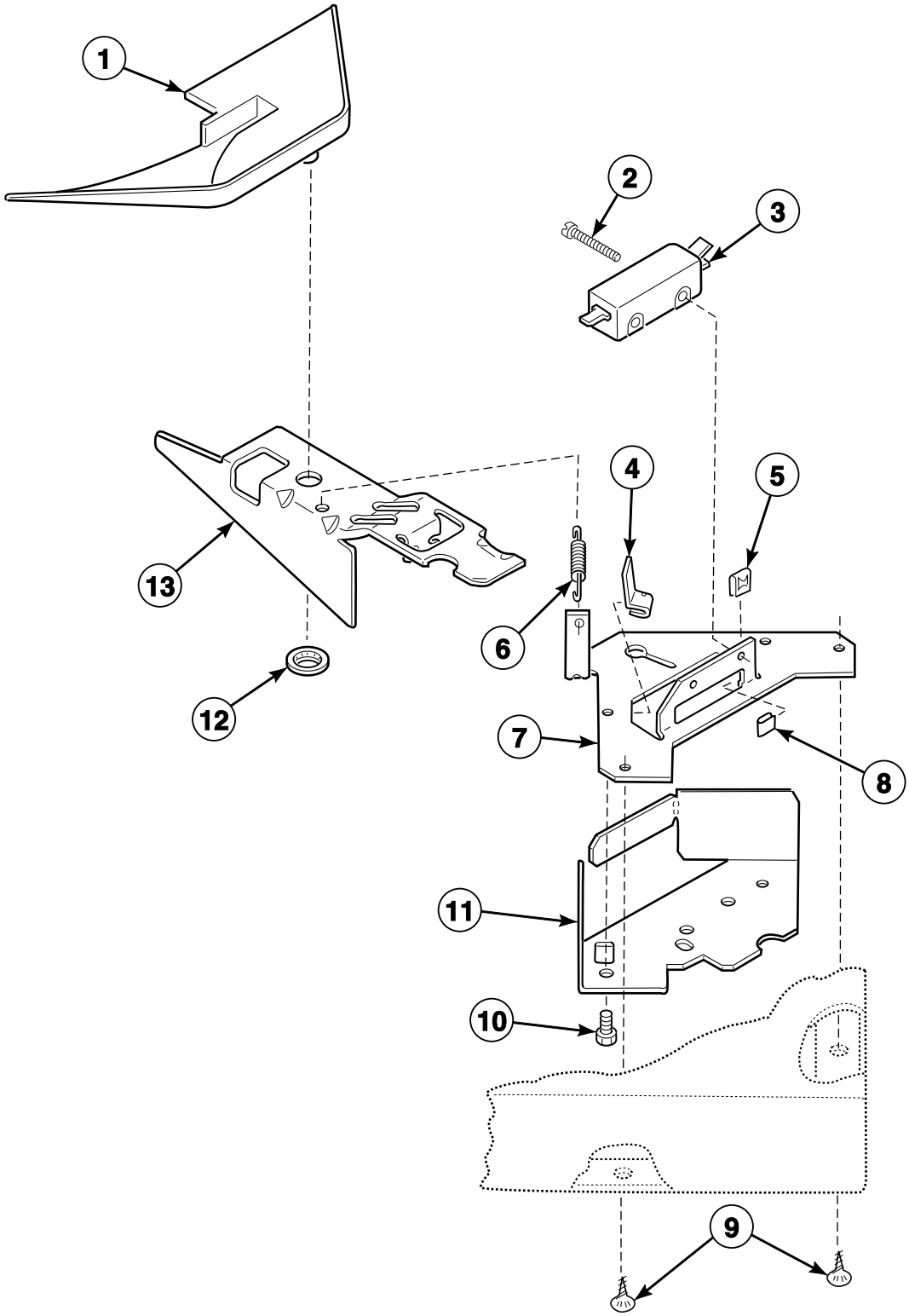

TLW1689P_200637

© Copyright, Alliance Laundry Systems LLC – DO NOT COPY or TRANSMIT

Loading Door Switch and Bracket Assembly

REF	PART NO.	DESCRIPTION	COMMENTS
1	29042	Lid Switch Shield	
2	Q6516	Screw	
3	27249	Switch	
4	27837	U-Clip	Models through Serial No. R1339649XG
5	27248	Nut	
6	27603	Switch Lever Spring	
7	27250	Out-of-Balance Switch Bracket	
8	27610	U-Clip	
9	28193	Screw	
10	23222	Screw	
11	33086	Lid Switch Guard	Models starting Serial No. R1339650XG and continuing through R1566483YG
12	29043	Nut	
13	27602	Out-of-Balance Switch Lever	

© Copyright, Alliance Laundry Systems LLC – DO NOT COPY or TRANSMIT

Inlet Hose, Filler Hose, Back Flow Preventer and Mixing Valve Mounting Bracket (Drawing 1 of 2)

Model NA2110 Starting Serial No. R1624440YK

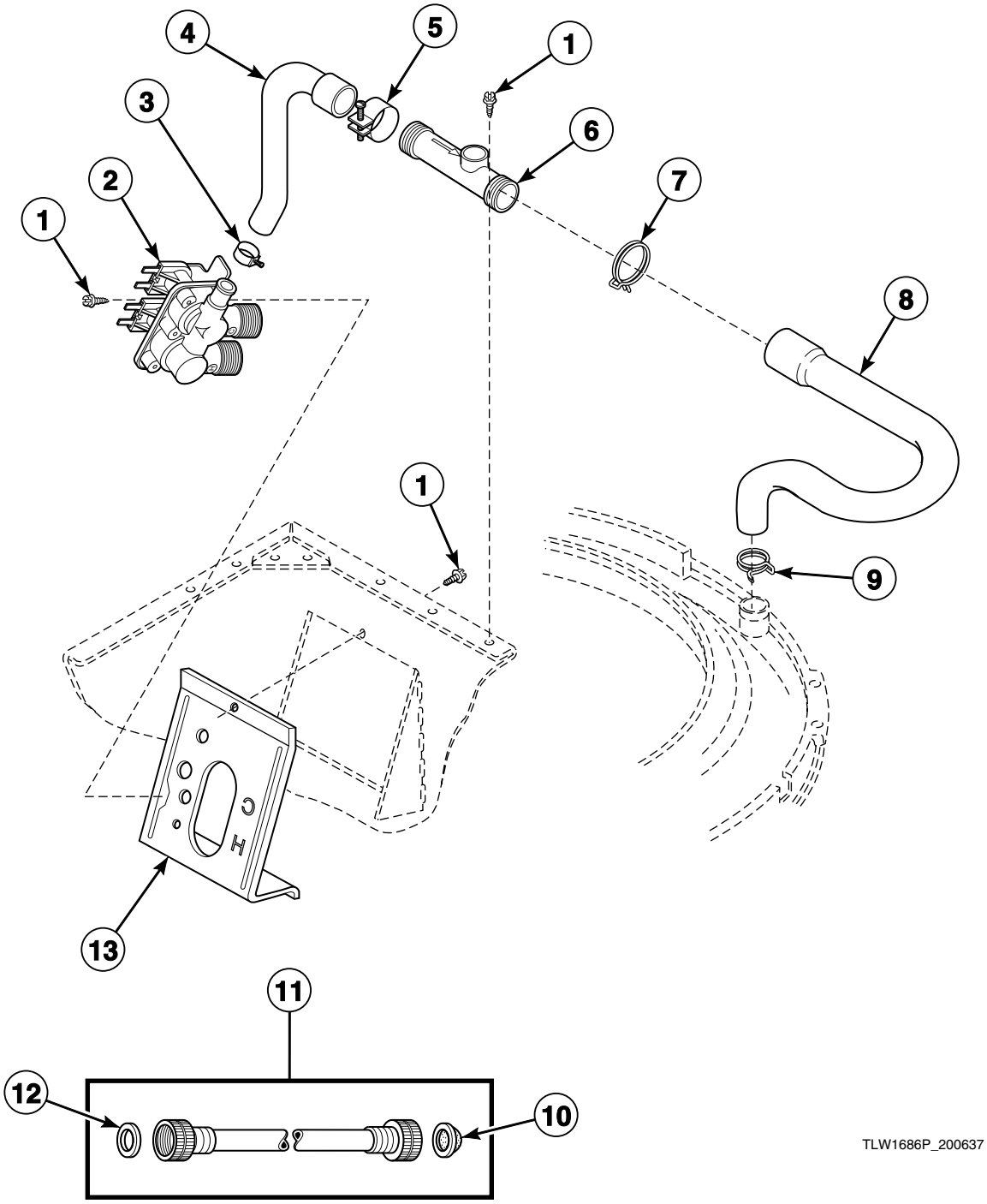

© Copyright, Alliance Laundry Systems LLC – DO NOT COPY or TRANSMIT

Inlet Hose, Filler Hose, Back Flow Preventer and Mixing Valve Mounting Bracket (Drawing 1 of 2)

REF	PART NO.	DESCRIPTION	COMMENTS
1	23962	Screw	
2	33930A	Mixing Valve Solenoid	
3	36801	Hose Clamp	
4	27183	Mixing Valve Hose	
5	20211	Hose Clamp	
6	34280	Backflow Preventer Assembly	
7	35370	Hose Clamp	
8	33186	Water Inlet Hose	
9	29210	Hose Clamp	
10	803615	Washer	Filter
11	F200116	Water Hose	Includes items 10 and 12
12	20290	Washer	
13	39407	Mixing Valve Mounting Bracket	

© Copyright, Alliance Laundry Systems LLC – DO NOT COPY or TRANSMIT

Inlet Hose, Filler Hose, Back Flow Preventer and Mixing Valve Mounting Bracket (Drawing 2 of 2)

All Models Except NA2110 Starting Serial No. R1624440YK

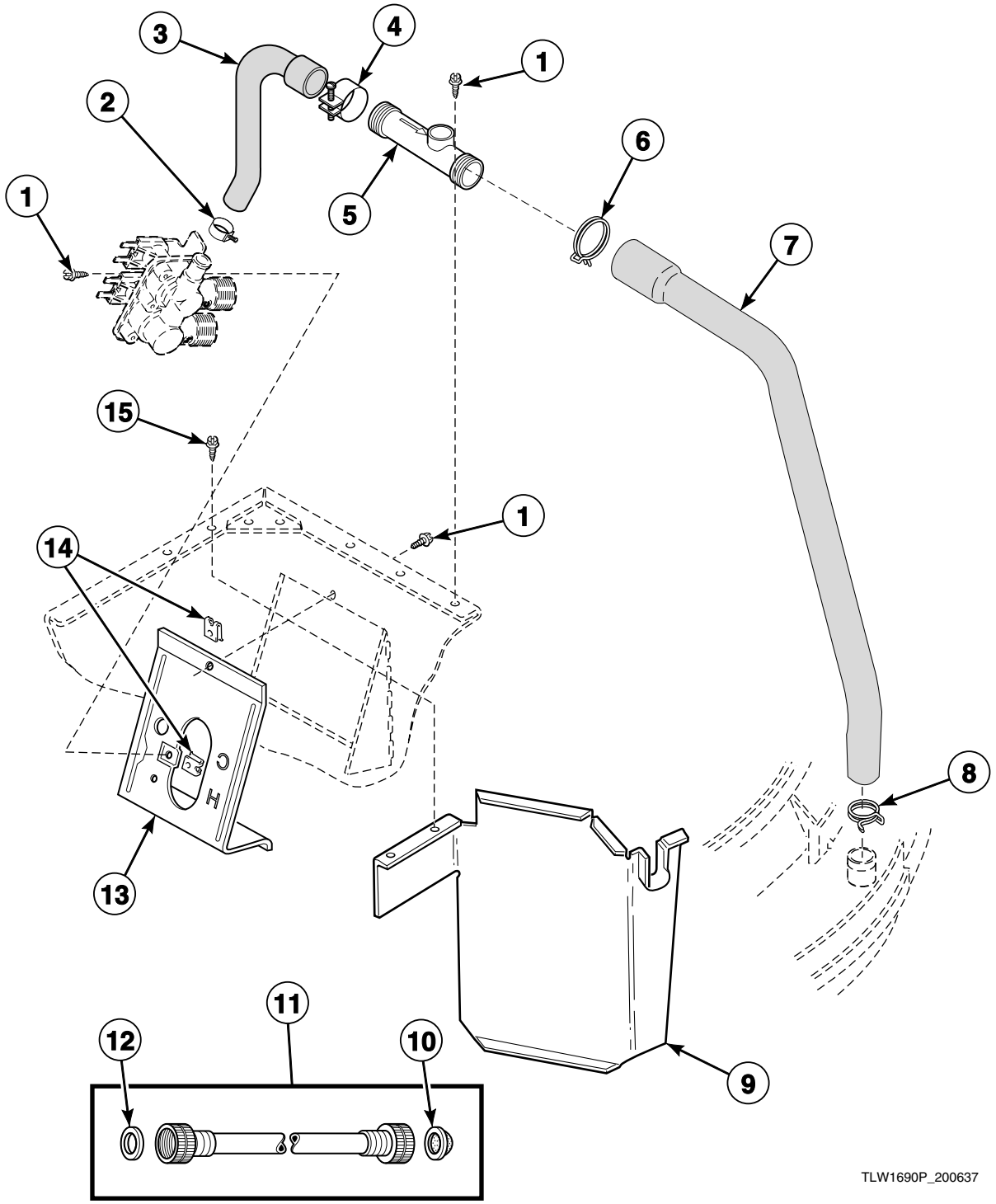

© Copyright, Alliance Laundry Systems LLC – DO NOT COPY or TRANSMIT

Inlet Hose, Filler Hose, Back Flow Preventer and Mixing Valve Mounting Bracket (Drawing 2 of 2)

REF	PART NO.	DESCRIPTION	COMMENTS
1	23962	Screw	
2	36801	Hose Clamp	
3	27183	Mixing Valve Hose	
4	20211	Hose Clamp	
5	34280	Backflow Preventer Assembly	
6	35370	Hose Clamp	Green
7	31140	Water Inlet Hose	
8	29210	Hose Clamp	Red
9	33098	Mixing Valve Guard	Models starting Serial No. R1339650XG and continuing through R1566483YG
10	803615	Washer	Filter
11	F200116	Water Hose	Hose is equipped with 2 standard hose couplings; Includes items 10 and 12
	38349P	Fill Hose Kit	Hose is equipped with 1 metric and 1 standard hose coupling
12	20290	Washer	
13	39407	Mixing Valve Mounting Bracket	Replaces 27126 Mixing Valve Mounting Bracket
14	54038	Nut	Use with 27126 Mixing Valve Mounting Bracket
15	502535	Screw	

© Copyright, Alliance Laundry Systems LLC – DO NOT COPY or TRANSMIT

Mixing Valve Assembly (Drawing 1 of 2)

Elbi Company

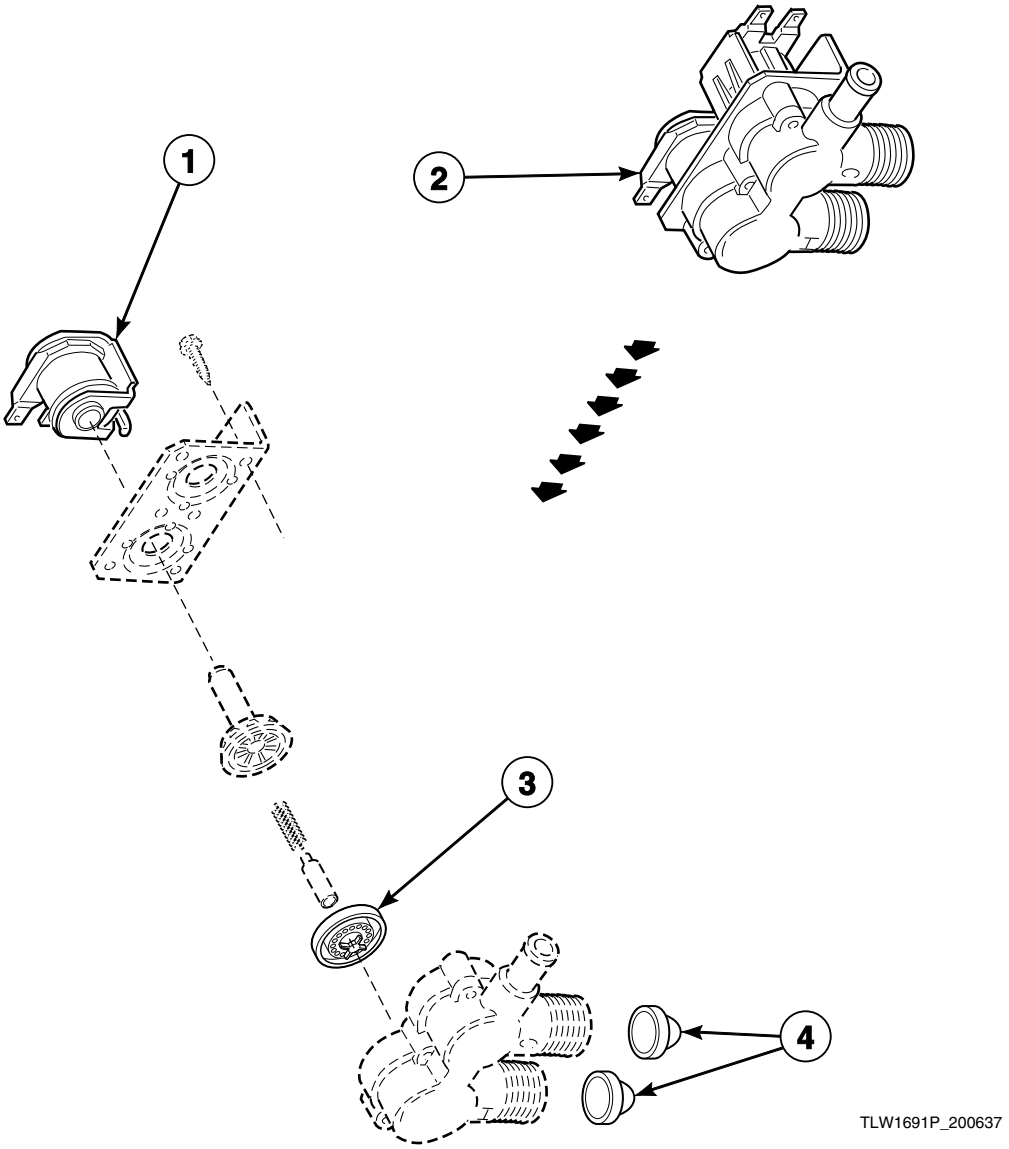

© Copyright, Alliance Laundry Systems LLC – DO NOT COPY or TRANSMIT

Mixing Valve Assembly (Drawing 1 of 2)

REF	PART NO.	DESCRIPTION	COMMENTS
1	33084	Solenoid	
2	35856P	Mixing Valve	Models NA3310-3000, NA3311-3050, NA3311-3059, NA3311-3062, NA3311-3069, NA3510-3300, NA3511-3300, NA5331-2000, NA5331-3000, NA5331-3050 and NA5331-3062
	33930P	Mixing Valve	All other models
3	33079	Diaphragm	
4	F270200	Strainer	

© Copyright, Alliance Laundry Systems LLC – DO NOT COPY or TRANSMIT

Mixing Valve Assembly (Drawing 2 of 2)

Dole or Eaton Company

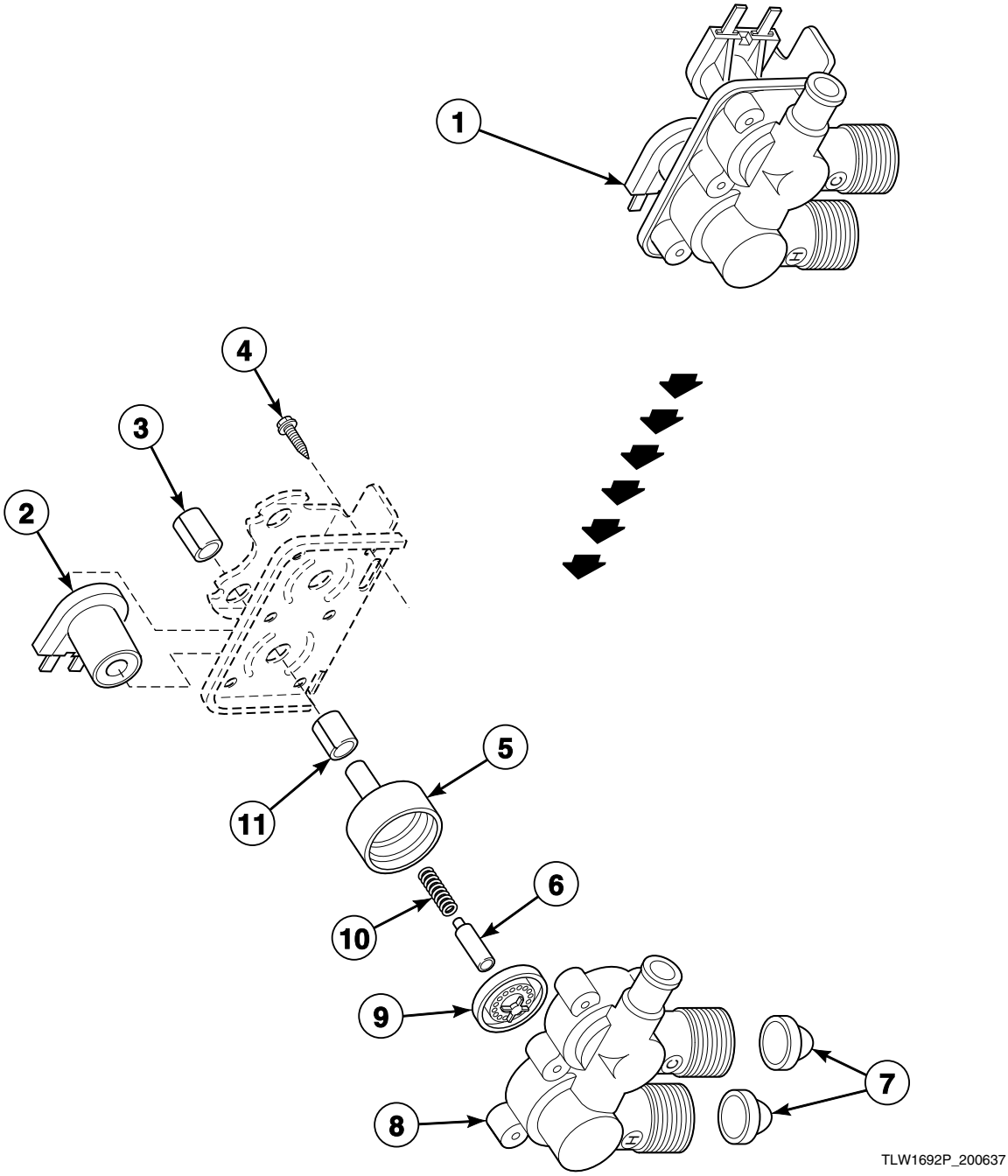

© Copyright, Alliance Laundry Systems LLC – DO NOT COPY or TRANSMIT

Mixing Valve Assembly (Drawing 2 of 2)

REF	PART NO.	DESCRIPTION	COMMENTS
1	35856P	Mixing Valve	Models NA3310-3000, NA3311-3050, NA3311-3059, NA3311-3062, NA3311-3069, NA3510-3300, NA3511-3300, NA5331-2000, NA5331-3000, NA5331-3050 and NA5331-3062
	33930P	Mixing Valve	All other models
2	33930A	Mixing Valve Solenoid	
3	24128	Sleeve	Long
4	25817C	Screw	
5	24130	Armature Guide	
6	24132	Armature	
7	F270200	Strainer	
8	24159	Valve Body	Yellow
9	24134	Diaphragm	
10	24131	Spring	
11	24129	Sleeve	Short

© Copyright, Alliance Laundry Systems LLC – DO NOT COPY or TRANSMIT

Agitator, Drive Bell and Seal Kit

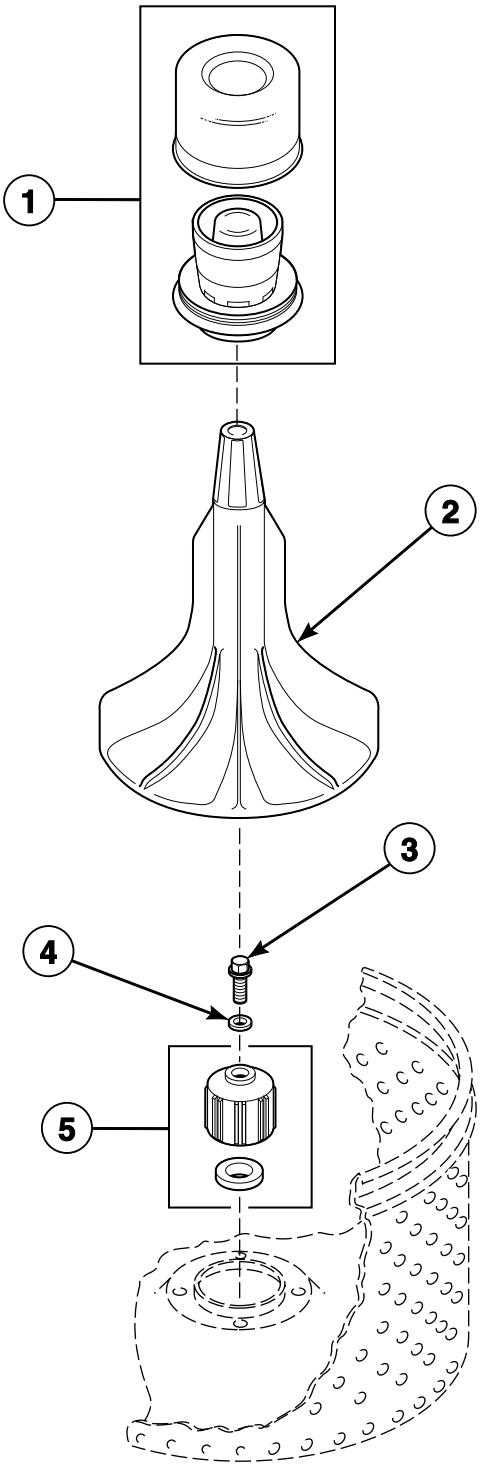

TLW1693P_200637

© Copyright, Alliance Laundry Systems LLC – DO NOT COPY or TRANSMIT

Agitator, Drive Bell and Seal Kit

REF	PART NO.	DESCRIPTION	COMMENTS
1	33510	Fabric Softener Dispenser Assembly	Optional on some models
2	33513	Agitator	Model NA2110 starting Serial No. R1624440YK
	33514	Agitator	All other models
3	30852	Screw	
4	30853	Seal	
5	39508P	Drive Bell and Seal Kit	Includes seal head, seal seat and items 3 and 4

© Copyright, Alliance Laundry Systems LLC – DO NOT COPY or TRANSMIT

Lint Filter, Washtub and Hub

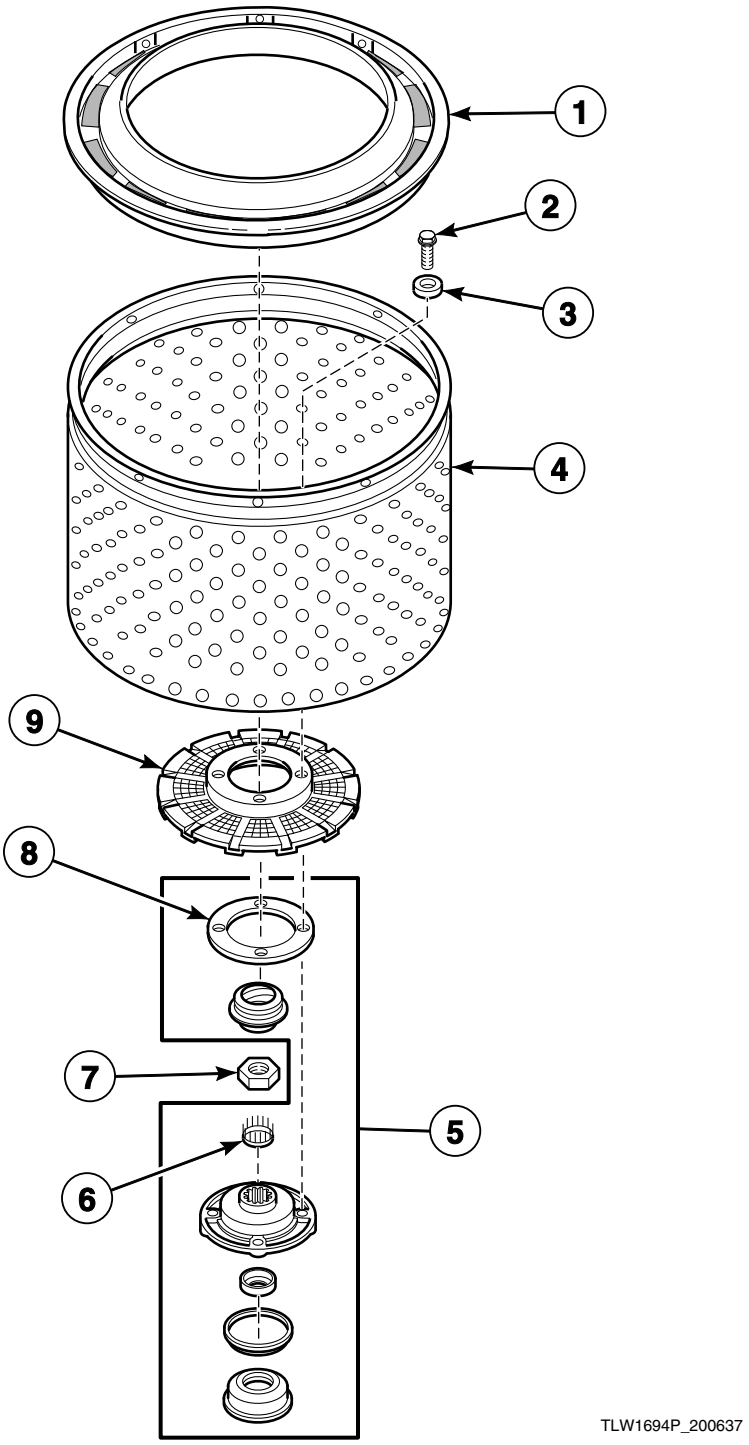

© Copyright, Alliance Laundry Systems LLC – DO NOT COPY or TRANSMIT

Lint Filter, Washtub and Hub

REF	PART NO.	DESCRIPTION	COMMENTS
1	35035	Clothes Guard	Model NA2110 starting Serial No. R6124440YK
	33521	Lint Filter	Model NA2110 through Serial No. R6124439YK; All other models
2	27202	Screw	
3	28094	Washer	
4	39248P	Tub Assembly	Models AA4212, AA5220, AA5221, AA5222, NA3312, NA3512, NA3612, NA4522, NA6332, NA6522 and NA6532
	39252P	Tub Assembly	Porcelain
	39387P	Tub Assembly	Stainless steel
5	495P3	Hub and Seal Kit	Replaces 441P3; Includes 27184 Cover Gasket and 442P3 Drive Bell Seal Kit
6	29728	Spline Insert	
7	29220	Nut	
8	39122	Washtub Gasket	Model NA2110; All other models through Serial No. R1438801XN
9	38371	Lint Filter	All models except NA2110 starting Serial No. R1438802XN

© Copyright, Alliance Laundry Systems LLC – DO NOT COPY or TRANSMIT

Outer Tub, Cover and Pressure Hose

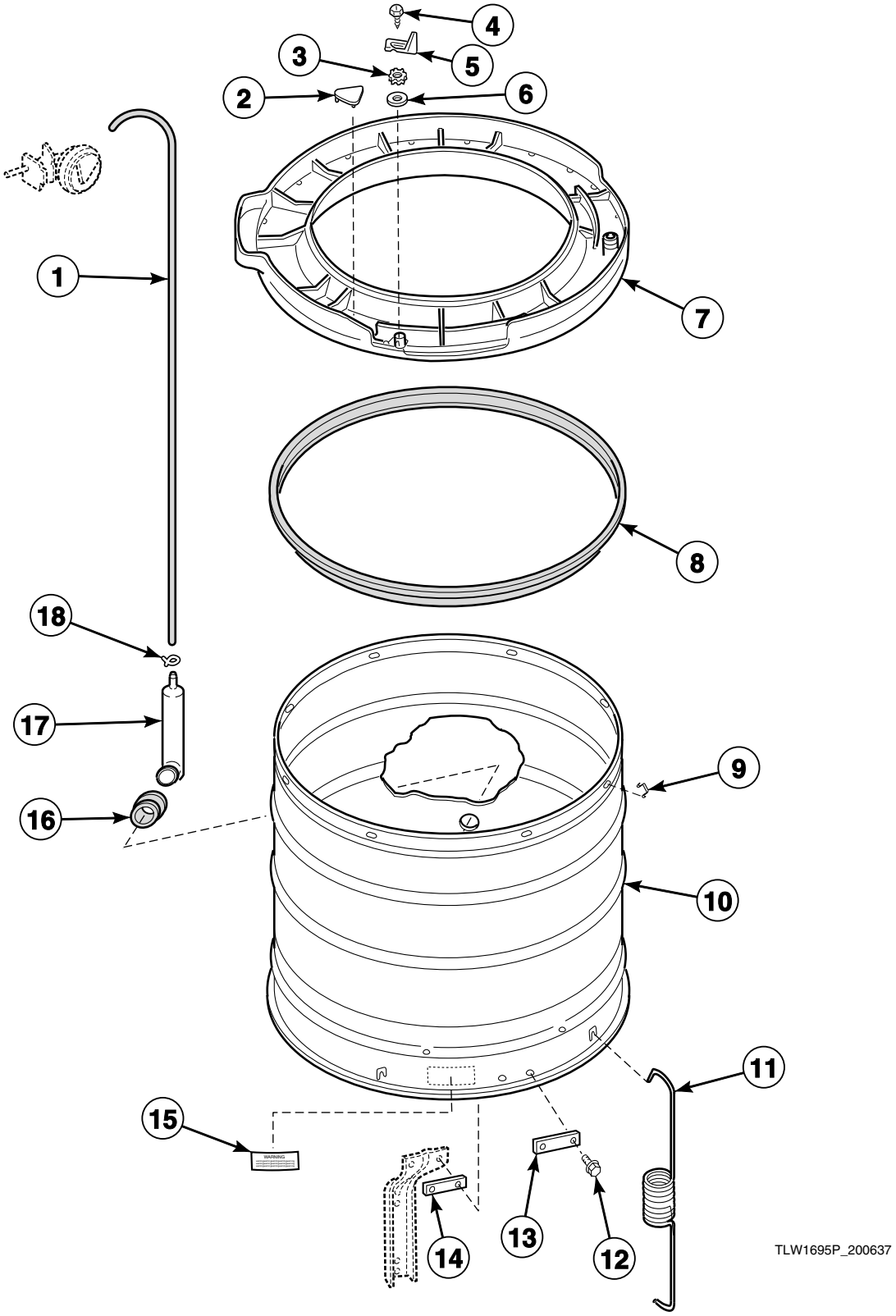

© Copyright, Alliance Laundry Systems LLC – DO NOT COPY or TRANSMIT

Outer Tub, Cover and Pressure Hose

REF	PART NO.	DESCRIPTION	COMMENTS
1	39125	Tubing	
2	29901	Plug	
3	03815	Washer	
4	503661	Screw	
5	27247	Out-of-Balance Switch Trigger	
6	23425	Washer	
7	31153	Outer Tub Cover	Includes item 2
8	32857	Tub Cover Gasket	Model NA2110; Models starting Serial No. R1624440YK
	27184	Tub Cover Gasket	All other models; Includes 495P3 Hub and Seal Kit
9	27017	Spring Clip	
10	507P3	Outer Tub Kit	Models AA3110, AA3111, NA2110, NA2310 and NA2510; All other models starting Serial No. R1438802XN
	30508	Outer Tub	All other models; Models through Serial No. R1438801XN
11	27239	Leg Spring	
12	35369	Screw	
13	27926	Leg Plate	.063 inches thick
14	27927	Leg Plate	.032 inches thick
15	27195	Warning Sticker	
16	29175	Grommet	
17	30907	Pressure Bulb	
18	39282	Hose Clamp	

© Copyright, Alliance Laundry Systems LLC – DO NOT COPY or TRANSMIT

Motor, Mounting Bracket, Belts and Idler Assembly

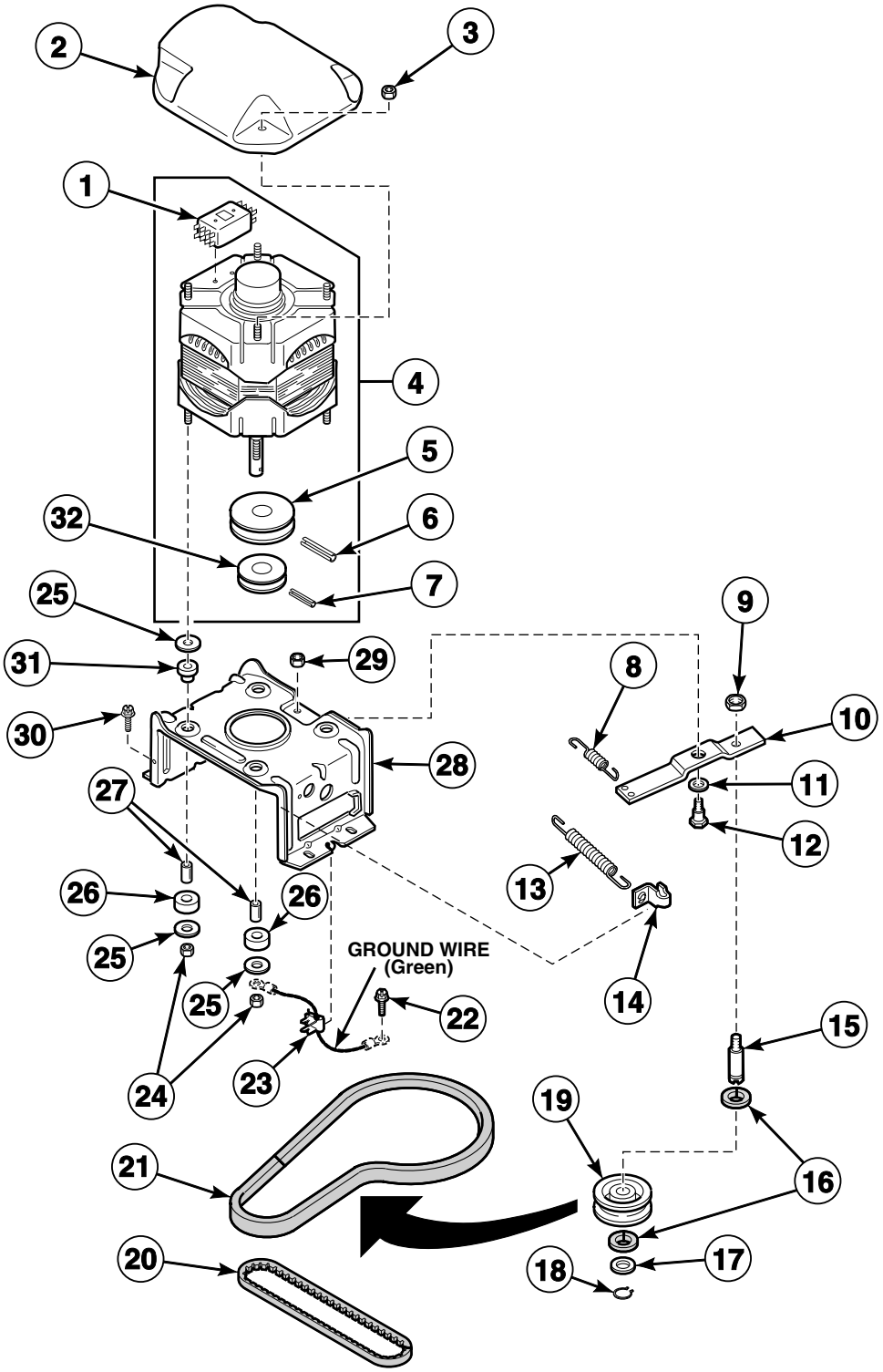

W463P_200637

© Copyright, Alliance Laundry Systems LLC – DO NOT COPY or TRANSMIT

Motor, Mounting Bracket, Belts and Idler Assembly

REF	PART NO.	DESCRIPTION	COMMENTS
	258P3	Capacitor Kit	For areas where low voltage exists
1	24139	Motor Switch	Used with 30895 Emerson motor
	24140	Motor Switch	Used with 30897 Emerson motor
	30895A	Motor Switch	Used with 30895 General Electric motor
	30897AP	Motor Switch	Used with 30897 General Electric motor
2	27136	Motor Shield	
3	27201	Nut	
4	28155P	Motor Kit	1 speed; 120 Volt/50 Hertz
	30010P	Motor Kit	1 speed; 230 Volt/50 Hertz
	27658P	Motor Kit	1 speed; 120 Volt/60 Hertz/1 Phase
	30283	Motor Assembly	1 speed; 230 Volt/60 Hertz
	27179P	Motor Kit	2 speed; 120 Volt/60 Hertz/1 Phase
	28543	Motor and Pulley Assembly	2 speed; 230 Volt/60 Hertz
	28341	Motor and Pulley Assembly	2 speed; 230 Volt/50 Hertz
	34388P	Motor Kit	2 speed; 230 Volt/50 Hertz; Australia
5	27171	Motor Pulley	
6	23750	Roll Pin	
7	10416	Roll Pin	
8	30620	Idler Lever Helper Spring	
9	28803	Nut	
10	31054	Idler Lever	
11	81392	Washer	
12	27229	Screw	
13	37366	Idler Spring	
14	28849	Spring Clip	
15	28802P	Idler Shaft	
16	29443	Washer	
17	52549	Washer	Nylatron
18	23748	Retaining Ring	
19	28800P	Idler Pulley	
20	28043	Pump Belt	Pump; Models NA3310-1000, NA3310-3000, NA3311-3050, NA3311-3059, NA3311-3062, NA3311-3069, NA5331-1000, NA5331-3000, NA5331-3050 and NA5331-3062
	27155	Pump Belt	Pump; All other models
21	33843	Belt	Agitate and spin; Models NA3310-1000 and NA5331-1000
	27155	Pump Belt	Agitate and spin; Models NA3510-3300, NA3511-3300 and NA5331-2000
	28043	Pump Belt	Agitate and spin; Models NA3310-3000, NA3311-3050, NA3311-3059, NA3311-3062, NA3311-3069, NA5331-3000, NA5331-3050 and NA5331-3062
	28808	Belt	Agitate and spin; All other models
22	52909	Screw	
23	00161	Grounding Clip	
24	23604	Nut	
25	03888	Washer	
26	01953	Rubber Motor Mount	Lower
27	27181	Motor Spacer	
28	28791	Motor Mounting Bracket	
29	52566	Nut	
30	503661	Screw	
31	01952A	Rubber Motor Mount	Upper
32	28056	Pump Motor Pulley	Pump; Models NA3310-1000, NA3310-3000, NA3311-3050, NA3311-3059, NA3311-3062, NA3311-3069, NA5331-1000, NA5331-3000, NA5331-3050 and NA5331-3062
	27104	Motor Pulley	Pump; All other models

© Copyright, Alliance Laundry Systems LLC – DO NOT COPY or TRANSMIT

Bearing Housing, Brake, Pulley and Pivot Dome

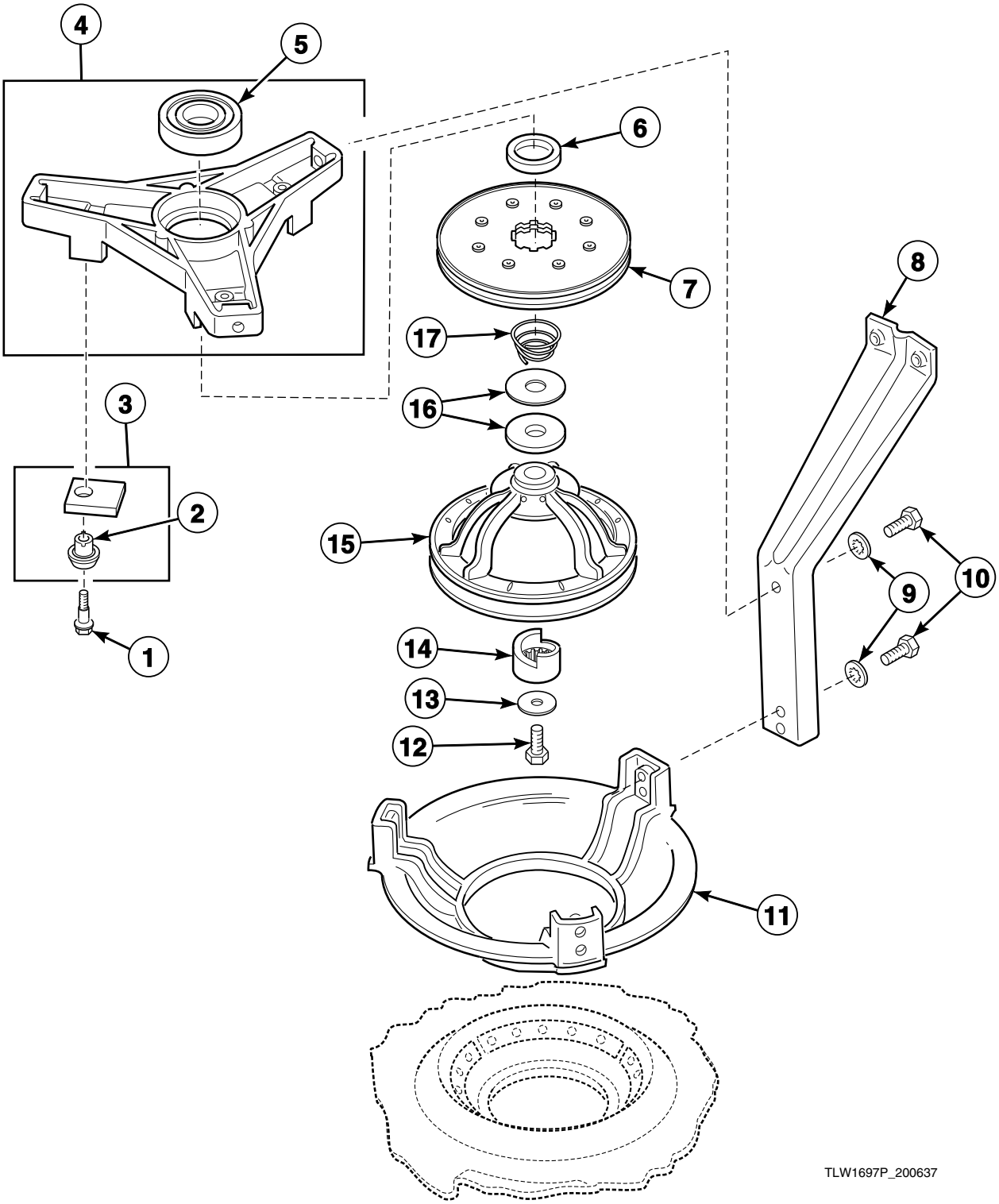

© Copyright, Alliance Laundry Systems LLC – DO NOT COPY or TRANSMIT

Bearing Housing, Brake, Pulley and Pivot Dome

REF	PART NO.	DESCRIPTION	COMMENTS
1	26547	Screw	
2	29993	Anti-Rotation Sleeve	
3	548P3	Brake Pad Kit	Includes 3 pads and sleeves
4	35746	Bearing Housing Assembly	
5	28944RP	Upper or Lower Bearing	
6	27176	Spacer	Use with item 7
7	38505P	Brake Kit	
8	27090	Support Leg	
9	04366	Washer	
10	35369	Screw	
11	27124	Pivot Dome	
12	27220	Screw	
13	26509	Washer	
14	27018	Helix	
15	34232P	Pulley and Washers Kit	
16	32651	Washer	Replaced 27015 Washer
17	33435	Spring	

© Copyright, Alliance Laundry Systems LLC – DO NOT COPY or TRANSMIT

Transmission Assembly and Balance Ring

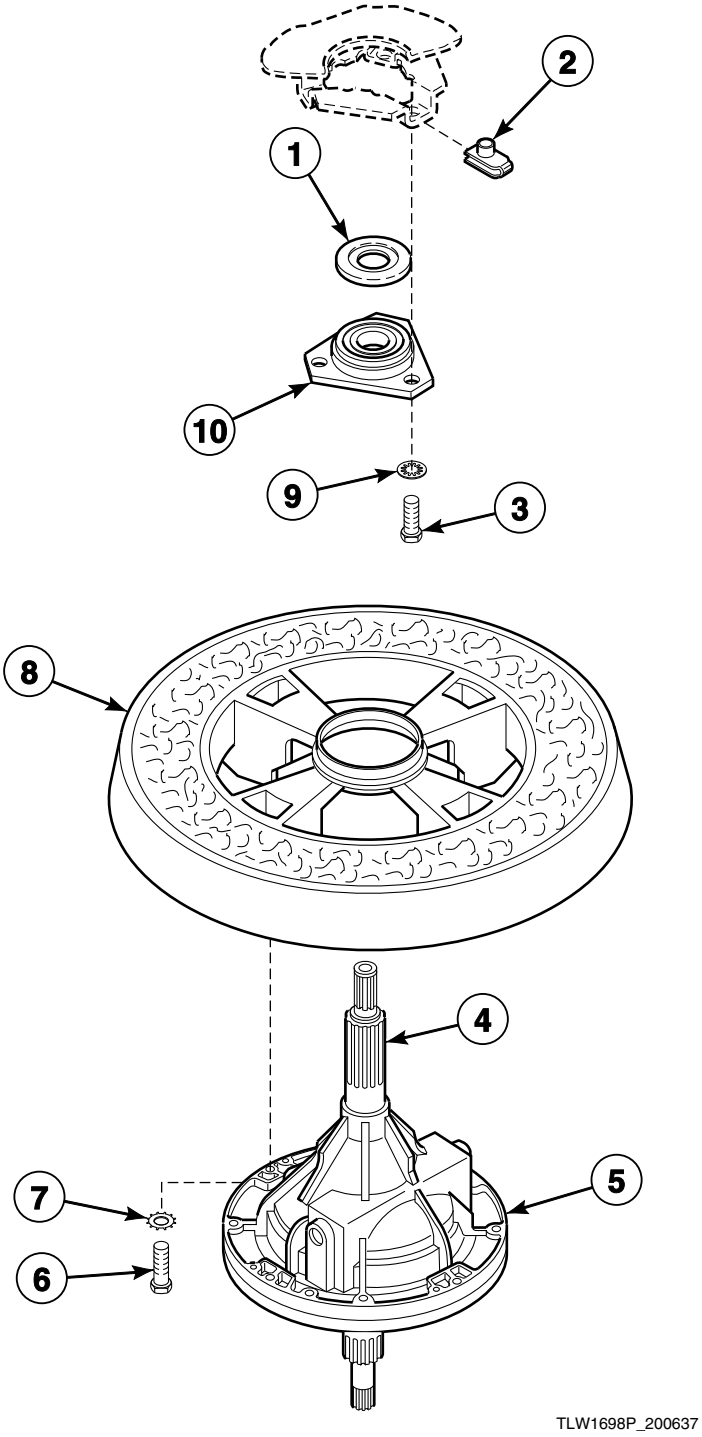

© Copyright, Alliance Laundry Systems LLC – DO NOT COPY or TRANSMIT

Transmission Assembly and Balance Ring

REF	PART NO.	DESCRIPTION	COMMENTS
1	27187	Flinger	
2	27222	Nut	Included with outer tub
3	M400057	Screw	
4	27604P	Anti-Seize Compound	Apply to this area of both the upper and lower transmission tubes
5	33227P	Transmission Assembly	Replaces 30978 Transmission Assembly
6	27200	Screw	
7	24475	Washer	Models NA3310-1000, NA3310-3000, NA3311-3050, NA3311-3059, NA3311-3062, NA3311-3069, NA5331-1000, NA5331-3000, NA5331-3050 and NA5331-3062
	02431	Washer	All other models
8	34731	Balance Ring Assembly	
9	04366	Washer	
10	27182	Bearing Housing Assembly	Upper

© Copyright, Alliance Laundry Systems LLC – DO NOT COPY or TRANSMIT

Components for 33227P Transmission Assembly

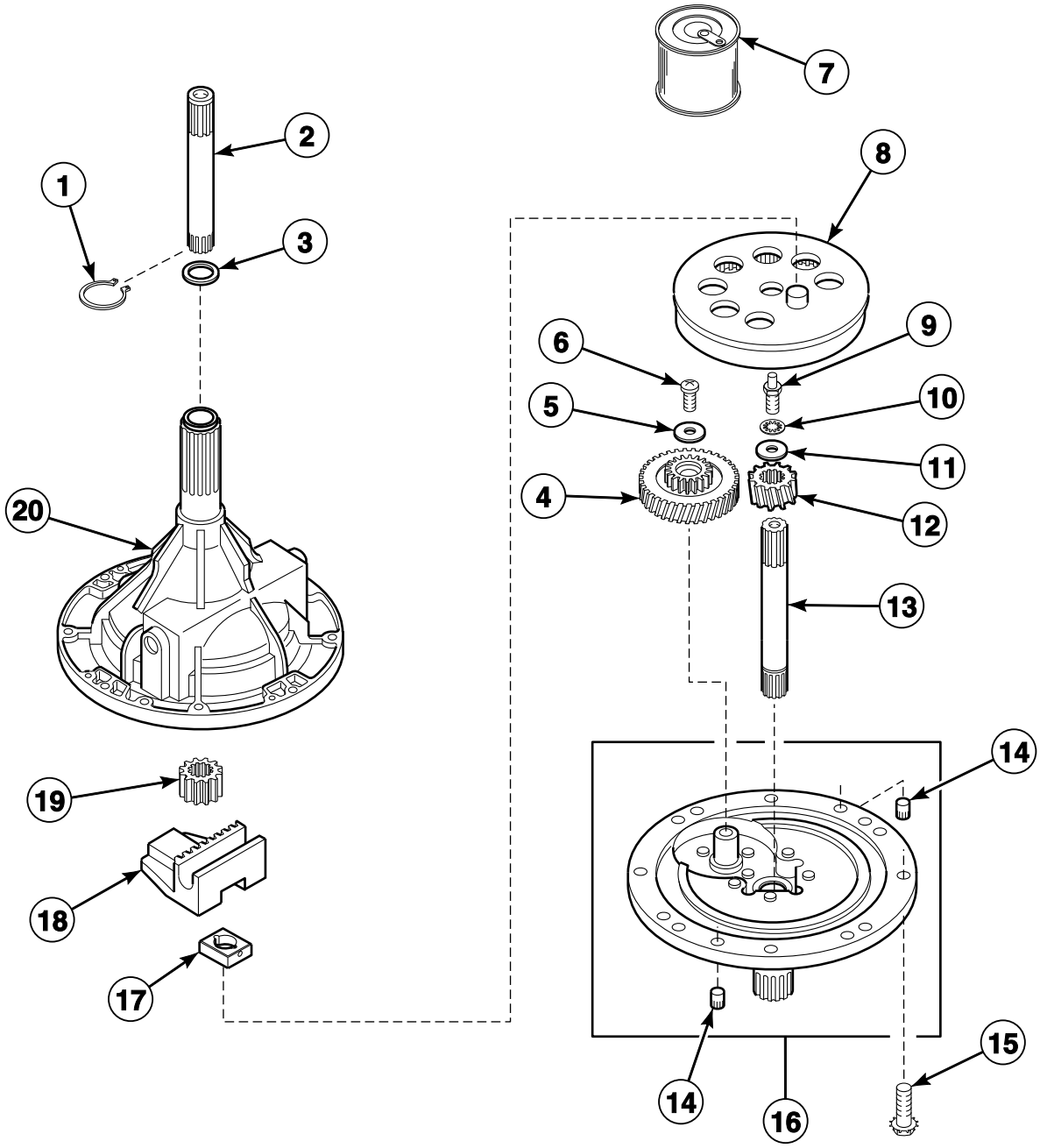

W157P_200637

© Copyright, Alliance Laundry Systems LLC – DO NOT COPY or TRANSMIT

Components for 33227P Transmission Assembly

REF	PART NO.	DESCRIPTION	COMMENTS
	37577P	Transmission Sealant	Use as a sealant between transmission case and cover
1	27197	Retaining Ring	
2	36570P	Output Shaft	
3	20212	Washer	
4	29161P	Reduction Gear	
5	29260	Washer	
6	29273	Screw	
7	27243P	Transmission Oil	1 fill
8	26577	Gear and Stud Assembly	
9	27030	Screw	
10	21456	Washer	
11	26509	Washer	
12	36562P	Drive Pinion	
13	27081P	Input Shaft	
14	27172	Dowel Pin	
15	32814	Screw	
16	38287P	Transmission Cover Assembly	
17	26493	Slide	
18	201664	Rack	
19	27003	Agitator Pinion	
20	33223P	Transmission Case Assembly	

© Copyright, Alliance Laundry Systems LLC – DO NOT COPY or TRANSMIT

Pump Assembly, Bracket, Hoses and Siphon Break Kit (Drawing 1 of 2)

Model NA2110 Starting Serial No. R612440YK

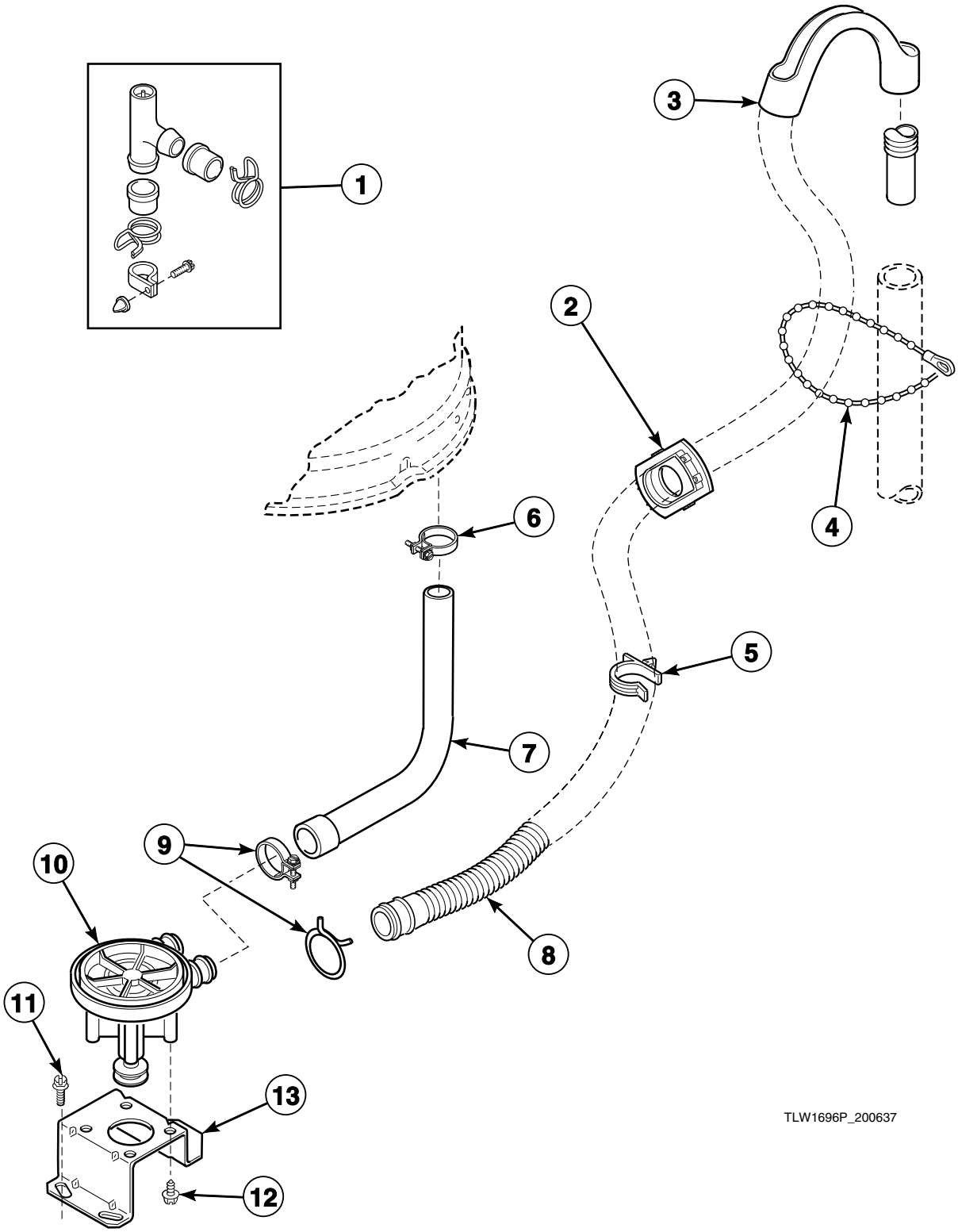

© Copyright, Alliance Laundry Systems LLC – DO NOT COPY or TRANSMIT

Pump Assembly, Bracket, Hoses and Siphon Break Kit (Drawing 1 of 2)

REF	PART NO.	DESCRIPTION	COMMENTS
1	562P3	Siphon Break Kit	
2	32219	Strain Relief	
3	33615	Drain Hose Sleeve	
4	33489	Standpipe Strap	
5	34321	Hose Clamp	
6	20391	Hose Clamp	
7	27160	Drain Tub-to-Pump Hose	
8	39953	Drain Hose	
9	20211	Hose Clamp	
10	31969	Pump Assembly	
11	503661	Screw	
12	31098	Screw	
13	27105	Pump Mounting Bracket	

© Copyright, Alliance Laundry Systems LLC – DO NOT COPY or TRANSMIT

Pump Assembly, Bracket, Hoses and Siphon Break Kit (Drawing 2 of 2)

All Models Except NA2110 Starting Serial No. R1624440YK

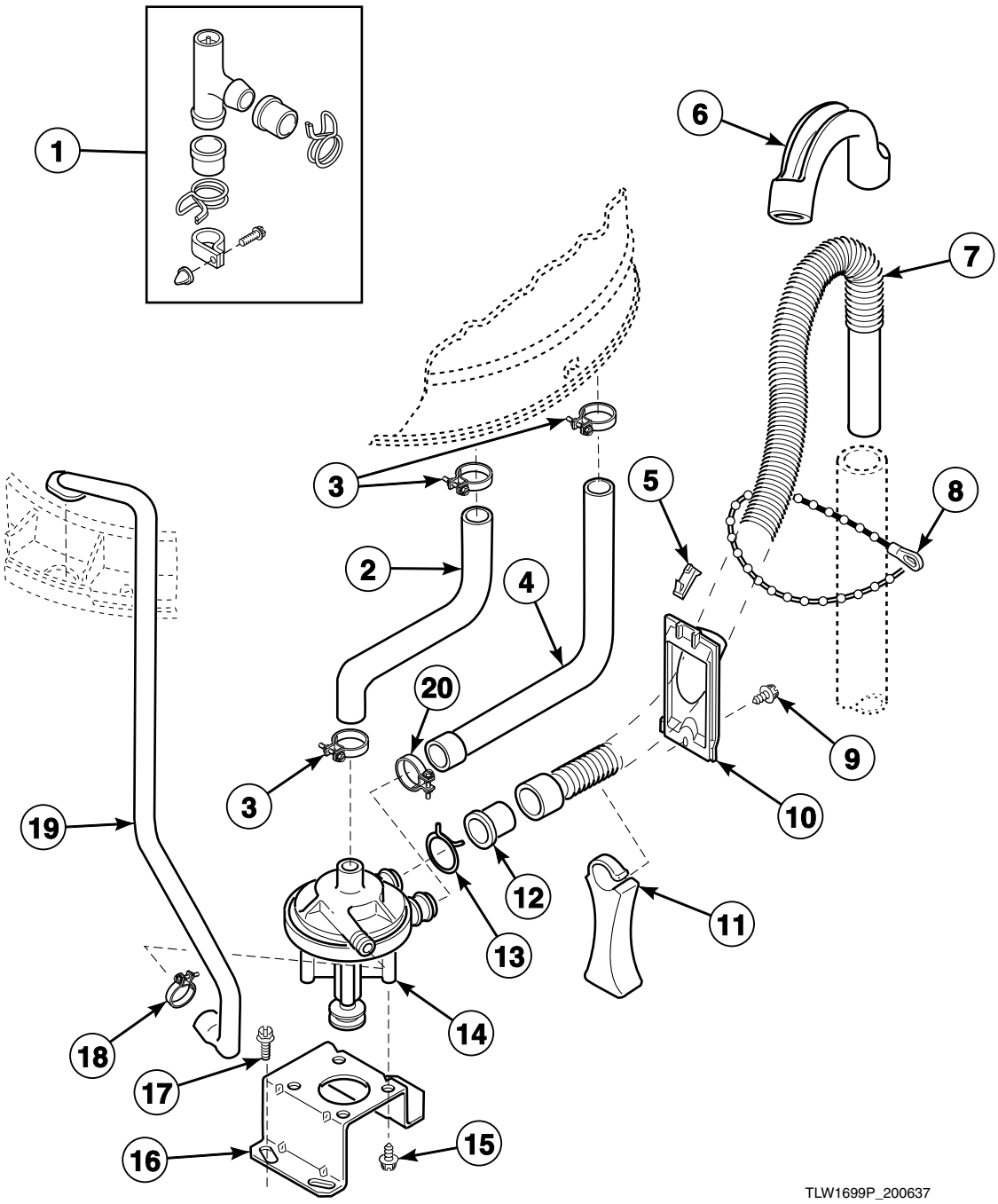

© Copyright, Alliance Laundry Systems LLC – DO NOT COPY or TRANSMIT

Pump Assembly, Bracket, Hoses and Siphon Break Kit (Drawing 2 of 2)

REF	PART NO.	DESCRIPTION	COMMENTS
	451P3	Drain Extension Kit	Use with 20616 Drain Hose; Order by the foot as required
1	562P3	Siphon Break Kit	Must be installed in drain hose if the drain receptacle is lower than the cabinet top of the washer
2	27159	Tub-to-Pump Hose	Models through Serial No. R1438801XN; All models except AA3110, AA3111, NA2110, NA2310 and NA2510
3	20391	Hose Clamp	
4	27160	Drain Tub-to-Pump Hose	
5	29936	Hose Retainer Clip	
6	29144	Drain Hose Sleeve	
7	39952	Drain Hose	
8	33489	Standpipe Strap	Replaces 29999 Strap
9	27196	Screw	
10	29131	Hose Retainer	Mounts to rear of washer
11	29284	Hose Support	Mounts to base of washer
12	29143	Hose Adapter	
13	29172	Hose Clamp	
14	31969	Pump Assembly	Models AA3110, AA3111, NA2110, NA2310 and NA2510; All other models starting Serial No. R1438802XN
	31968	Pump Assembly	All other models through Serial No. R1438801XN
15	31098	Screw	
16	27105	Pump Mounting Bracket	
17	503661	Screw	
18	27644	Hose Clamp	
19	27232	Recirculating Hose	Models through Serial No. R1438801XN; All models except AA3110, AA3111, NA2110, NA2310 and NA2510
20	20211	Hose Clamp	

© Copyright, Alliance Laundry Systems LLC – DO NOT COPY or TRANSMIT

Front Panel, Cabinet and Base

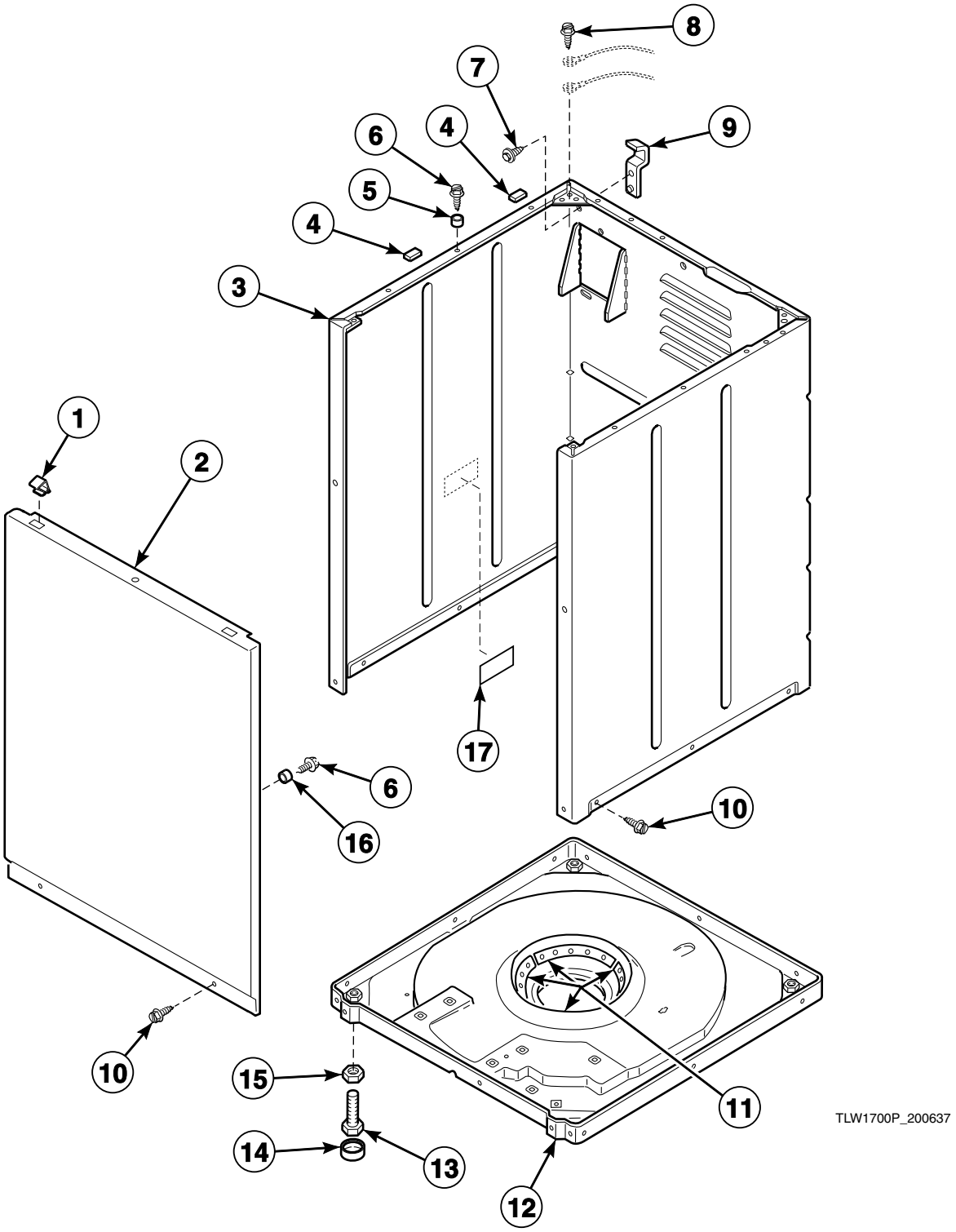

© Copyright, Alliance Laundry Systems LLC – DO NOT COPY or TRANSMIT

Front Panel, Cabinet and Base

REF	PART NO.	DESCRIPTION	COMMENTS
	26594P	Silicone Grease	For pads in base
1	28835	Speed Clip	
2	32708WP	Front Panel	White
	32708LP	Front Panel	Almond
3	38612WP	Service Cabinet Kit	White
	38612LP	Service Cabinet Kit	Almond
4	56128	Bumper Pad	
5	56079	Panel Locator	
6	39733	Screw	
7	51780	Screw	
8	23962	Screw	
9	27103	Hold-Down Lug Hinge	
10	27196	Screw	
11	434P3	Snubber Pad Kit	Includes 4 pads
12	31653P	Base Assembly	Includes snubber pads and leveling legs
13	34319	Leveling Leg	
14	21749	Rubber Foot	
15	21899	Nut	
16	28102	Panel Locator	
17	33285	Double-Sided Tape	

© Copyright, Alliance Laundry Systems LLC – DO NOT COPY or TRANSMIT

Power Cord and Wire Terminals

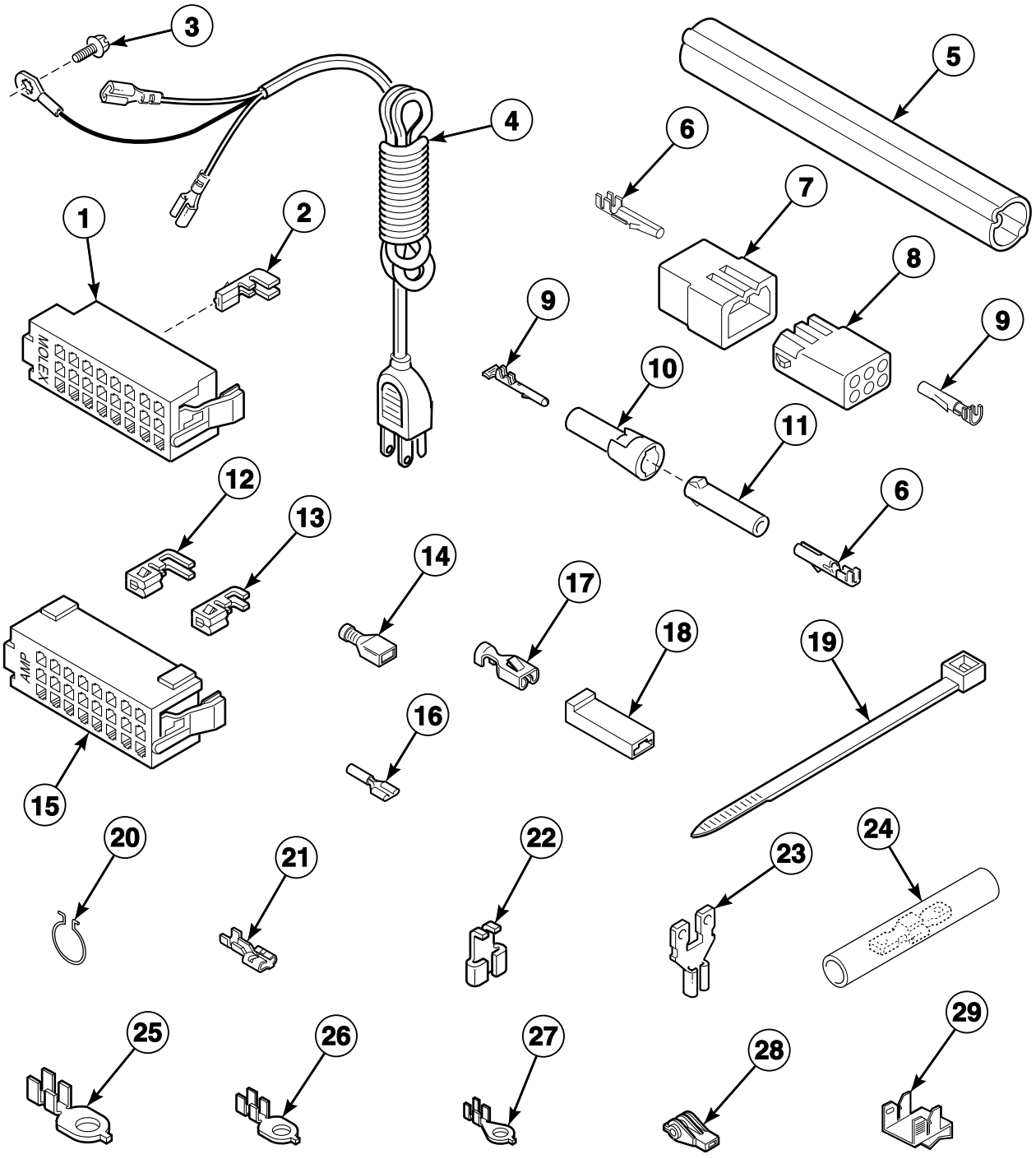

TLW1701P_200637

© Copyright, Alliance Laundry Systems LLC – DO NOT COPY or TRANSMIT

Power Cord and Wire Terminals

REF	PART NO.	DESCRIPTION	COMMENTS
1	32746	24 Position Housing	Right
	34123	24 Position Housing	Left
2	00188	Female Terminal	Used for 1 or 2 wire application
3	52909	Screw	
4	34458	Lead-In Cord	
5	33087	Wire Harness Enclosure	Models starting Serial No. R1339650XG and continuing through R1566483YG
6	00116	Male Pin Terminal	
7	23041	6 Circuit Plug	
8	26708	6 Circuit Receptacle	
9	00117	Female Pin Terminal	
10	26302	1 Circuit Plug	
11	26301	1 Circuit Receptacle	
12	00183	Female Terminal	2 wire
13	00180	Female Terminal	1 wire
14	00165	Insulated Female Terminal	3/16 inch
	00359	Insulated Female Spade Terminal	1/4 inch
15	28856	24 Position Housing	
16	00214	Pre-Insulated Spade Terminal	18 gauge
	00215	Pre-Insulated Spade Terminal	12 gauge
17	00115	Female Spade Terminal	
18	90789	Receptacle Housing	
19	55881	Harness Strap	
20	51291	Wire Clip	
21	00223	Female Spade Terminal	1/4 inch; (1) 18 gauge wire
	00121	Female Spade Terminal	1/4 inch; (2) 18 gauge wires or (1) 12 gauge wire
22	00120	Female Flag Terminal	
23	29673	Terminal Adapter	
24	21091	Connector	
25	00113	Ring Terminal	1/4 inch ring
26	00111	Ring Terminal	Large shank; (2) 18 gauge wires
27	00110	Ring Terminal	Small shank; (1) 18 gauge wire
28	70210	Insulator	
29	00161	Grounding Clip	

© Copyright, Alliance Laundry Systems LLC – DO NOT COPY or TRANSMIT

Special Tools (Drawing 1 of 2)

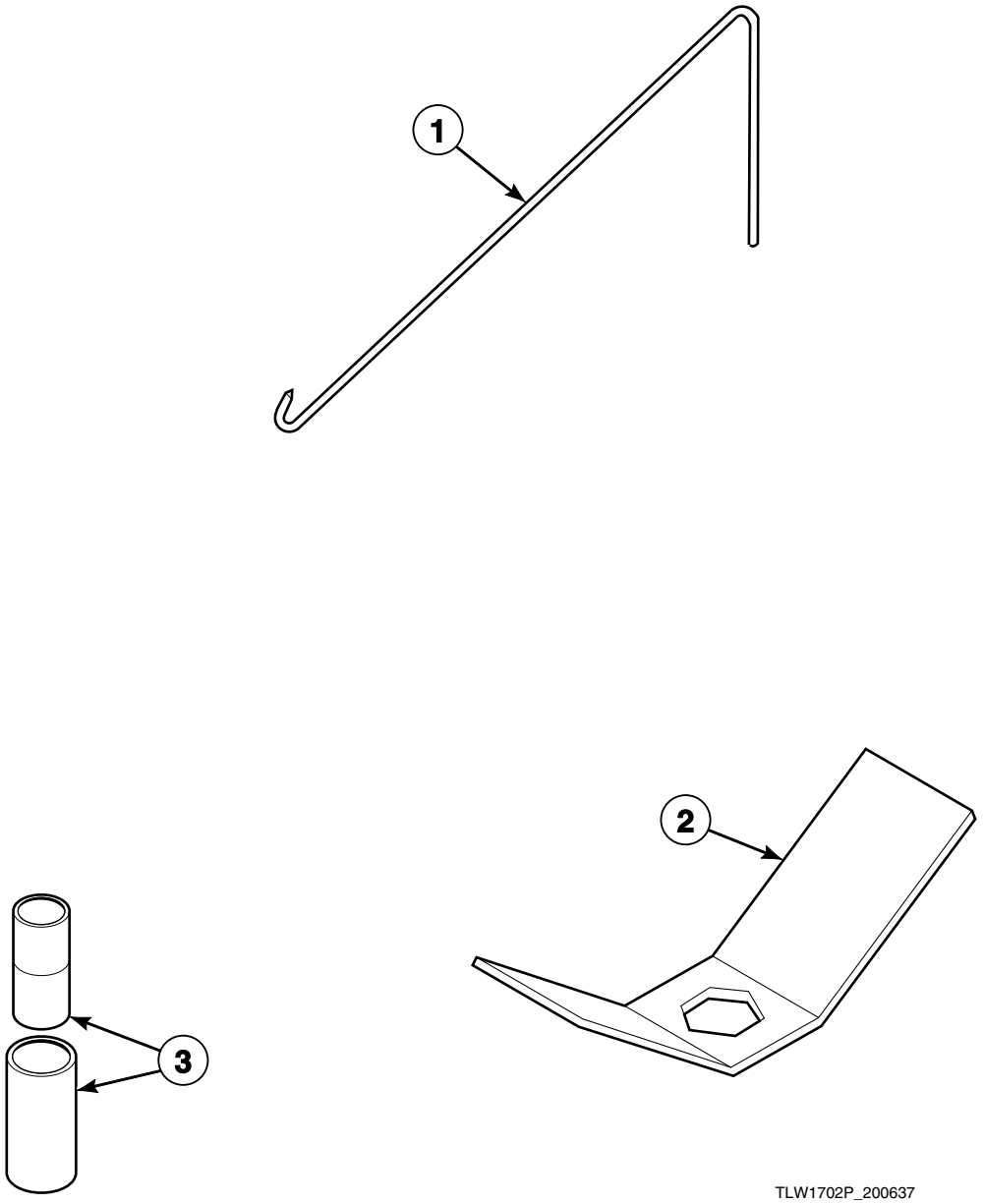

© Copyright, Alliance Laundry Systems LLC – DO NOT COPY or TRANSMIT

Special Tools (Drawing 1 of 2)

REF	PART NO.	DESCRIPTION	COMMENTS
1	321P4	Spring Hook Tool	Use to remove 5 centering springs from outer tub
2	306P4	Hex Wrench Tool	Use to remove hex locknut from washtub hub
3	242P4	Spring Installer	Use to install brake spring

© Copyright, Alliance Laundry Systems LLC – DO NOT COPY or TRANSMIT

Special Tools (Drawing 2 of 2)

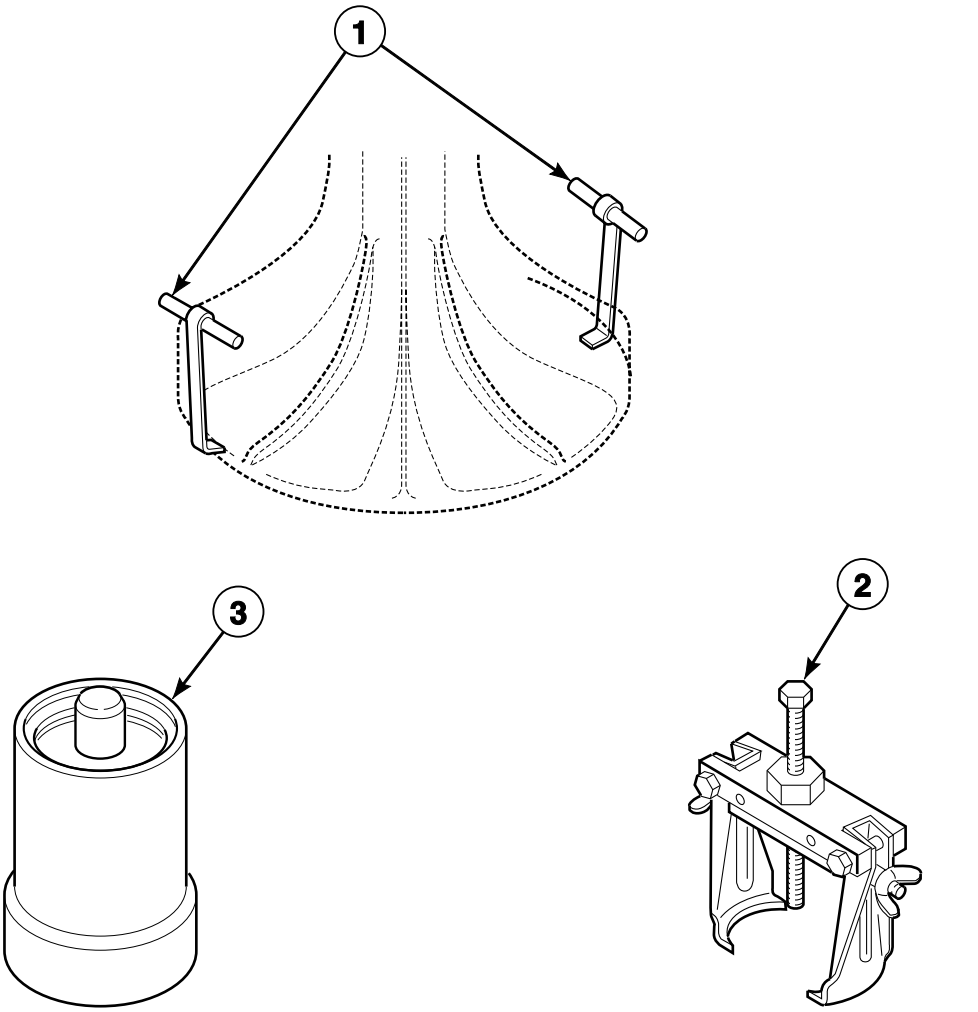

TLW1703P_200637

© Copyright, Alliance Laundry Systems LLC – DO NOT COPY or TRANSMIT

Special Tools (Drawing 2 of 2)

REF	PART NO.	DESCRIPTION	COMMENTS
1	254P4P	Agitator Hook	Set of 2; Use to remove agitator from drive bell by hand
2	294P4	Agitator Drive Bell Puller	Use to remove and install drive bell to transmission shaft
3	255P4	Seal Tool	Use to install the seal seat and the seal head

© Copyright, Alliance Laundry Systems LLC – DO NOT COPY or TRANSMIT

Wire Harnesses and Wires

PART NO.	DESCRIPTION	COMMENTS
33096	Wire Harness Assembly	Lid Switch; Models AA5121, AA5220, AA5221, AA5222, AA7131, AA9131, NA5330, NA5331, NA5530, NA5531, NA6331, NA6332, NA6530, NA6531, NA6532, NA8331, NA8531 and NA8631
33094	Wire Harness Assembly	Lid Switch; Models NA3320 and NA3520; Models AA3110, AA3111, AA4110, AA4111, AA6121, NA2110, NA2310, NA2510, NA3310, NA3311, NA3312, NA3510, NA3511, NA3512, NA3612, NA4320, NA4321, NA4520, NA4521, NA4522, NA4621, NA5320, NA5321, NA5520, NA5521, NA5721, NA6321, NA6520, NA6521, NA6522, NA6621, NA7321 and NA7521
33828	Wire Harness Assembly	Mixing Valve; Models NA3311-3062, NA3320, NA3520, NA4320, NA4321, NA4520, NA4521 and NA5331-3062; Models AA4110, AA4111 and NA3612 starting Serial No. 14N82611; Models AA3110, AA3111, AA5121, AA5220, AA5221, AA5222, AA6121, AA7131, AA9131, NA2110, NA2310, NA2510, NA3310, NA3311, NA3312, NA3510, NA3511, NA3512, NA4522, NA4621, NA5320, NA5321, NA5330, NA5331, NA5520, NA5521, NA5530, NA5531, NA5721, NA6321, NA6331, NA6332, NA6520, NA6521, NA6522, NA6530, NA6531, NA6532, NA6621, NA7321, NA7521, NA8331, NA8531 and NA8631 starting Serial No. 14N82612
32168P	Wire Harness Assembly	Base; Models AA5121, AA5220, AA5221, AA5222, AA7131, AA9131, NA5330, NA5331, NA5530, NA5531, NA6331, NA6332, NA6530, NA6531, NA6532, NA8331, NA8531 and NA8631
32156P	Wire Harness Assembly	Base; Models NA7321 and NA7521 through Serial No. R1339649XG
32229	Wire Harness Assembly	Base; Models AA6121, NA6321, NA6520, NA6521, NA6522 and NA6621 starting Serial No. 14N82612 and continuing through R1339649XG
33201	Wire Harness Assembly	Base; Models AA6121, NA6321, NA6520, NA6521, NA6522 and NA6621 starting Serial No. R1339650XG
33191	Base Wire Harness Assembly	Models NA4320, NA4321, NA4520, NA4521, NA4522, NA4621, NA5320, NA5321, NA5520, NA5521 and NA5721 starting Serial No. R1339650XG
33194	Wire Harness Assembly	Base; Models AA4110, AA4111 and NA3612 starting Serial No. R1339650XG; Model NA2110 starting Serial No. R1339650XG and continuing through R1624439YK
34405	Wire Harness Assembly	Base; Model NA2110 starting Serial No. R1624440YK
33192	Wire Harness Assembly	Base; Models NA3320 and NA3520
32159P	Base Wire Harness Assembly	Models AA3110, AA3111, NA2310, NA2510, NA3310, NA3311, NA3312, NA3510, NA3511 and NA3512 through Serial No. R1339649XG
28131	Motor Harness Assembly	Models AA6121, NA4320, NA4321, NA4520, NA4521, NA4522, NA4621, NA5320, NA5321, NA5520, NA5521, NA5721, NA6321, NA6520, NA6521, NA6522, NA6621, NA7321 and NA7521
28132	Motor Harness Assembly	Models AA3110, AA3111, AA4110, AA4111, AA5121, AA5220, AA5221, AA5222, AA7131, AA9131, NA2110, NA2310, NA2510, NA3310, NA3311, NA3312, NA3320, NA3510, NA3511, NA3512, NA3520, NA3612, NA5330, NA5331, NA5530, NA5531, NA6331, NA6332, NA6530, NA6531, NA6532, NA8331, NA8531 and NA8631
45001	18 Gauge Wire	Black; Order wire by the foot and terminals as required
45380	12 Gauge Wire	Orange; Order wire by the foot and terminals as required

NOTE: Individual wires not serviced separately. Order complete harness, or order wire by the foot. When applying terminals to wires, it is recommended that terminals be soldered to wires.

© Copyright, Alliance Laundry Systems LLC – DO NOT COPY or TRANSMIT

Parts Index

A

Actuator Arm
33441 27
Agitator
33513 39
33514 39
Agitator Drive Bell Puller
294P4 63
Agitator Hook
254P4P 63
Agitator Pinion
27003 51
Anti-Rotation Sleeve
29993 47
Anti-Seize Compound
27604P 49
Armature
24132 37
Armature Guide
24130 37

B

Backflow Preventer Assembly
34280 ..... 31, 33
Balance Ring Assembly
34731 49
Base Assembly
31653P 57
Base Wire Harness Assembly
32159P 64
33191 64
Bearing Housing Assembly
27182 49
35746 47
Belt
28808 45
33843 45
Bleach Dispenser
34776 ..... 23, 25
Brake Kit
38505P 47
Brake Pad Kit
548P3 47
Bumper
21685 23
32507 25
Bumper Pad
56128 57
Bushing
27625 25
33446 23

C

Capacitor Kit
258P3 45
Clothes Guard
35035 41
Connector
21091 59
Control Hood
31224 5
Control Hood Assembly
31734 7
31735 ..... 13, 17, 19
32404 11
Control Hood Insert
32342 ..... 5, 9, 11, 13
32343 ..... 5, 9, 11, 13

D

Diaphragm
24134 37
33079 35
Disconnect Power Warning Label
505281 ..... 23, 25
Double-Sided Tape
33285 57
Dowel Pin
27172 51
Drain Extension Kit
451P3 55
Drain Hose
39952 55
39953 53
Drain Hose Sleeve
29144 55
33615 53
Drain Tub-to-Pump Hose
27160 ..... 53, 55
Drive Bell and Seal Kit
39508P 39
Drive Pinion
36562P 51

E

Electronic Control Assembly
31304 5
31305 ..... 5, 9
31306 9
31307 5
31308P 5
31309P 9
End Cap
31248 ..... 5, 7, 9, 11, 13, 15, 17, 19
31249 ..... 5, 7, 9, 11, 13, 15, 17, 19
34459 21
34460 21

N/A items do not appear in index.

© Copyright, Alliance Laundry Systems LLC – DO NOT COPY or TRANSMIT

F

Fabric Softener Dispenser Assembly
33510 39

Female Flag Terminal
00120 59

Female Pin Terminal
00117 59

Female Spade Terminal
00115 59
00121 59
00223 59

Female Terminal
00180 59
00183 59
00188 59

Fill Hose Kit
38349P 33

Flinger
27187 49

Front Panel
32708LP 57
32708WP 57

G

Gear and Stud Assembly
26577 51

Graphic Panel
31181 5
31182 5
31183 5
31184 9
31185 9
31186 7
31187 15
31188 15
31189 17
31190 ..... 17, 19
31191 19
31192 19
31193 5
31194 5
31195 9
31196 9
31197 7
31198 15
31199 15
31200 17
31201 ..... 17, 19
31202 19
31203 19
31204 21
31737 5
32193 19
32199 19
32202 17
32204 17
32205 17
32206 17
32226 11
32237 11
32241 11
32341 13
32349 13
32353 13
32357 ..... 5, 9
32398 13
32402 11
32634 13
32665 5
32666 11
32667 13
32714 13
32718 13
32722 13
32726 13
32730 11
32734 ..... 5, 9
33013 17
33146 13

Grommet
29175 43

Grounding Clip
00161 ..... 45, 59

H

Harness Strap
55881 59

Helix
27018 47

Hex Wrench Tool
306P4 61

Hinge
27626 25

Hinge Gasket
34338 23

Hold-Down Lug Hinge
27103 57

Hood and Mounting Bracket Assembly
31809 9
31810 15
31811 21

Hood Back Panel
37782 ..... 23, 25

Hose Adapter
29143 55

Hose Clamp
20211 ..... 31, 33, 53, 55
20391 ..... 53, 55
27644 55
29172 55
29210 ..... 31, 33
34321 53
35370 ..... 31, 33
36801 ..... 31, 33
39282 43

Hose Retainer
29131 55

Hose Retainer Clip
29936 55

Hose Support
29284 55

Housing, 24 Position
28856 59
32746 59
34123 59

N/A items do not appear in index.

© Copyright, Alliance Laundry Systems LLC – DO NOT COPY or TRANSMIT

Hub and Seal Kit
495P3 41

I

Idler Lever
31054 45
Idler Lever Helper Spring
30620 45
Idler Pulley
28800P 45
Idler Shaft
28802P 45
Idler Spring
37366 45
Input Shaft
27081P 51
Insulated Female Spade Terminal
00359 59
Insulated Female Terminal
00165 59
Insulator
70210 59

K

Knob Assembly
31286 ..... 5, 9, 11, 13, 15, 17, 19
31287 ..... 9, 11, 15, 17, 19

L

Lead-In Cord
34458 59
Leg Plate
27926 43
27927 43
Leg Spring
27239 43
Leveling Leg
34319 57
Lid
31317W 25
33517W 25
33541WP 23
Lid and Carton Assembly
31314LP 25
31314WP 25
31315LP 25
31315WP 25
Lid Hinge
36437 23
36438 23
Lid Lock Top Assembly
32810W 25
Lid Switch Catch
27149 25
Lid Switch Guard
33086 29
Lid Switch Shield
29042 29
Lint Filter
33521 41
38371 41

M

Male Pin Terminal
00116 59
Meter Case Wire Harness Assembly
33094 64
Mixing Valve
33930P 35, 37
35856P 35, 37
Mixing Valve Guard
33098 33
Mixing Valve Hose
27183 ..... 31, 33
Mixing Valve Mounting Bracket
39407 ..... 31, 33
Mixing Valve Solenoid
33930A 31, 37
Motor and Pulley Assembly
28341 45
28543 45
Motor Assembly
30283 45
Motor Harness Assembly
28131 64
28132 64
Motor Kit
27179P 45
27658P 45
28155P 45
30010P 45
34388P 45
Motor Mounting Bracket
28791 45
Motor Pulley
27104 45
27171 45
Motor Shield
27136 45
Motor Spacer
27181 45
Motor Switch
24139 45
24140 45
30895A 45
30897AP 45

N

Nameplate
32630 13
Nut
21752 25
21899 57
23604 45
27201 45
27222 49
27248 29
28803 45
29043 29

N/A items do not appear in index.

© Copyright, Alliance Laundry Systems LLC – DO NOT COPY or TRANSMIT

29220 41
52566 45
54038 33
57584 ..... 11, 13, 17, 19

O

Outer Tub
30508 43
Outer Tub Cover
31153 43
Outer Tub Kit
507P3 43
Out-of-Balance Switch Bracket
27250 29
Out-of-Balance Switch Lever
27602 29
Out-of-Balance Switch Trigger
27247 43
Output Shaft
36570P 51

P

Panel Locator
28102 57
56079 57
Pivot Dome
27124 47
Plug
29901 43
Plug, 1 Circuit
26302 59
Plug, 6 Circuit
23041 59
Pre-Insulated Spade Terminal
00214 59
00215 59
Pressure Bulb
30907 43
Pressure Switch
28615P 21
31675 ..... 5, 7, 11
Pulley and Washers Kit
34232P 47
Pump Assembly
31968 55
31969 ..... 53, 55
Pump Belt
27155 45
28043 45
Pump Motor Pulley
28056 45
Pump Mounting Bracket
27105 ..... 53, 55

R

Rack
201664 51
Receptacle Housing
90789 59
Receptacle, 1 Circuit
26301 59
Receptacle, 6 Circuit
26708 59
Recirculating Hose
27232 55
Reduction Gear
29161P 51
Retainer
10519 ..... 5, 9, 11, 13, 15, 17, 19
Retaining Ring
23748 45
27197 51
Ring Terminal
00110 59
00111 59
00113 59
Roll Pin
10416 45
23750 45
Rotary Pressure Switch
31266 ..... 5, 9, 13, 15, 17, 19
Rubber Foot
21749 57
Rubber Motor Mount
01952A 45
01953 45

S

Screw
M400057 49
Q6516 29
23222 29
23962 ..... 7, 9, 11, 13, 15, 17, 19, 21, 23, 25, 27, 31, 33, 57
25817C 37
26547 47
27030 51
27196 ..... 55, 57
27200 49
27202 41
27220 47
27229 45
28193 29
29273 51
30852 39
31098 ..... 53, 55
31260 ..... 5, 7, 9, 11, 13, 17, 19, 21
31752 ..... 5, 7, 9, 11, 13, 15, 17, 19, 21
32814 51
33562 ..... 23, 25
34337 23
35369 ..... 43, 47
36510 27
39733 57
502535 ..... 7, 15, 33
503661 ..... 43, 45, 53, 55
51780 57
52909 ..... 23, 25, 45, 59
Screw and Washer Assembly
27203 25

N/A items do not appear in index.

© Copyright, Alliance Laundry Systems LLC – DO NOT COPY or TRANSMIT

Seal
30853 39
Seal Tool
255P4 63
Service Cabinet Kit
38612LP 57
38612WP 57
Signal
59446 7
Silicone Grease
26594P 57
Siphon Break Kit
562P3 ..... 53, 55
Sleeve
24128 37
24129 37
Slide
26493 51
Slide Pressure Switch
31116 ..... 5, 7, 11
Snubber Pad Kit
434P3 57
Solenoid
33084 35
Spacer
27176 47
Speed Clip
28835 57
Speed Selector Switch
27500 11
Spline Insert
29728 41
Spring
24131 37
33435 47
33443 27
Spring Clip
27017 43
28849 45
Spring Hook Tool
321P4 61
Spring Installer
242P4 61
Standpipe Strap
33489 ..... 53, 55
Strain Relief
32219 53
38384 ..... 23, 25
Strainer
F270200 ..... 35, 37
Support Barrel
56534 ..... 23, 25
Support Leg
27090 47
Switch
27249 29
33445 27
Switch and Cover Assembly
31330 ..... 7, 15
31331 7
31332 ..... 7, 15
31333 7
Switch Holder Clip
33433 27
Switch Holder Kit
36497P 27
Switch Lever Spring
27603 29

T

Temperature Switch
21300 ..... 13, 17, 19
24392 11
Terminal Adapter
29673 59
Timer
31238P 13, 19, 21
31239P 13, 15, 17, 19
31240 7
31241P 19
31242 19
31243P 19
32039P 13
32228P 11
Timer Knob Assembly
31281 ..... 7, 11, 13, 15, 17, 19, 21
Timer Skirt Assembly
31267 21
31279 ..... 7, 11, 13, 15, 17, 19
31503 ..... 7, 11, 15, 17, 19
Top and Carton Assembly
32808LP 25
32808WP 25
Top Assembly
34902WP 23
Transmission Assembly
33227P 49
Transmission Case Assembly
33223P 51
Transmission Cover Assembly
38287P 51
Transmission Oil
27243P 51
Transmission Sealant
37577P 51
Tub Assembly
39248P 41
39252P 41
39387P 41
Tub Cover Gasket
27184 43
32857 43
Tubing
39125 43
Tub-to-Pump Hose
27159 55

U

U-Clip
27610 29
27837 29
Unbalanced Load Lever
33442 27

N/A items do not appear in index.

© Copyright, Alliance Laundry Systems LLC – DO NOT COPY or TRANSMIT

Upper or Lower Bearing
28944RP 47

V

Valve Body
24159 37

W

Warning Sticker
27195 43
Washer
02431 49
03815 43
03888 45
04366 ..... 47, 49
20212 51
20290 ..... 31, 33
21456 51
23425 43
24475 49
26509 ..... 47, 51
28094 41
29260 51
29443 45
32651 47
52549 45
803615 ..... 31, 33
81392 45
Washtub Gasket
39122 41
Water Hose
F200116 ..... 31, 33
Water Inlet Hose
31140 33
33186 31
Water Temperature Switch
28118 ..... 13, 17
Wire Clip
51291 59
Wire Harness Assembly
32156P 64
32168P 64
32229 64
33096 64
33192 64
33194 64
33201 64
33828 64
34405 64
Wire Harness Enclosure
33087 59
Wire, 12 Gauge
45380 64
Wire, 18 Gauge
45001 64

N/A items do not appear in index.

© Copyright, Alliance Laundry Systems LLC – DO NOT COPY or TRANSMIT